ATP-43(B)/MTP-43(B)

SHIP-TO-SHIP TOWING

0410LP1020711

2001

ATP-43(B)/MTP-43(B)

SHIP-TO-SHIP TOWING

2001

INTENTIONALLY BLANK

April 2003

PUBLICATION NOTICE

ROUTING

1. ATP-43(B)/MTP-43(B), SHIP-TO-SHIP TOWING, is available in the Navy Warfare Library. It is effective upon receipt.

2. ATP-43(B)/MTP-43(B), establishes common procedures for the planning and execution of vessel-to-vessel towing, and contains background information on organizations, communications, shiphandling and emergency procedures.

Navy Warfare Library Custodian

Navy Warfare Library publications must be made readily available to all users and other interested personnel within the U.S. Navy.

Note to Navy Warfare Library Custodian

This notice should be duplicated for routing to cognizant personnel to keep them informed of changes to this publication. It is not accountable.

INTENTIONALLY BLANK

NORTH ATLANTIC TREATY ORGANISATION

NATO STANDARDIZATION AGENCY

NATO LETTER OF PROMULGATION

November 2001

1. ATP-43(B)/MTP-43(B) SHIP-TO-SHIP-TOWING is a dual titled UNCLASSIFIED Allied Publication/Multinational Manual. The agreement of nations to use this publication is recorded in STANAG 1232.

2. ATP-43(B)/MTP-43(B) is effective on receipt. It supersedes ATP-43(A)(NAVY) which shall be destroyed in accordance with the local procedure for the destruction of documents.

3. This MM may be released to a non-NATO nation by a NATO nation or Command, on a need to know basis, without further authorisation from NSA or NATO Headquarters. This MM shall not be released by any non-NATO nation. The releasing nation or command is responsible for:

a. Providing updates of the publication to receiving nations as required.

b. Informing NSA when distributing this MM to other nations.

4. This MM shall not be posted on any freely accessible information or media facility.

5. Change proposals may be submitted by any nation, either through a sponsoring NATO Nation or directly to UK as the NATO Custodian.

JAN H ERIKSEN
Rear Admiral, NONA
Director NSA

INTENTIONALLY BLANK

DEPARTMENT OF THE NAVY
NAVY WARFARE DEVELOPMENT COMMAND
686 CUSHING ROAD
NEWPORT RI 02841-1207

May 2003

U.S. LETTER OF PROMULGATION

1. ATP-43(B)/MTP-43(B), SHIP-TO-SHIP TOWING, is UNCLASSIFIED. Handle in accordance with the administrative procedures contained in NTTP 1-01.

2. ATP-43(B)/MTP-43(B) is effective upon receipt and supersedes ATP-43(A), SHIP-TO-SHIP TOWING. Destroy superseded material without report.

3. SECNAVINST 5510.31 provides procedures for disclosing this publication or portions thereof to foreign governments or international organizations.

R. A. ROUTE

NOTE TO U.S. HOLDERS — Report administrative discrepancies by letter to Navy Warfare Development Command. Order a hardcopy publication by MILSTRIP or through the Navy Supply System's Print on Demand (POD) Program.

INTENTIONALLY BLANK

RECORD OF RESERVATIONS

CHAPTER	RECORD OF RESERVATIONS BY NATIONS
1	
2	GE
3	
ANNEX	
A	CA, FR, GE, US
B	

RECORD OF RESERVATIONS (Cont)

NATION	RESERVATIONS
GE	A 'tattle tale' cord will not be provided in the GE Navy; instead a double shackle i.a.w. 'VG84533, Part 1', will be used as a predetermined breaking point. Paragraph 0205c.
CA	Availability of link will dictate implementation. Annex A.
FR	As regards low and medium tonnage ships, the section of the link used can be less than that of the NATO link. In any case, however, the inside dimensions are to be the same as those of the NATO link, thus ensuring the required interoperability. Annex A.
GE	GE reserves the right to use a towing link with a diameter of 44mm instead of 55mm without changing the inner dimensions according to Annex A.
US	US aircraft carriers (CVs and CVNs) and minesweepers (MCMs) do not carry the NATO Standard Towing Link.

RECORD OF CHANGES

CHANGE DATE	DATE ENTERED	EFFECTIVE DATE	BY WHOM ENTERED

INTENTIONALLY BLANK

CONTENTS LIST

CONTENTS LIST Continued

CHAPTER 1

INTRODUCTION

0101. Purpose of ATP-43(B)/MTP-43(B)

a. The purpose of ATP-43(B)/MTP-43(B) is to establish common organisation procedures for vessel to vessel towing so that those concerned with planning and executing such operations may make the best use of the resources available from the various nations.

b. The primary aim of this publication is to ensure that ships of Allied Nations can effectively conduct vessel to vessel towing operations. It is not intended to prevent an officer exercising tactical command from initiating and issuing special instructions or from conceiving and developing new procedures. It assumes that nations have an effective procedure that can cope with a towing operation.

0102. Scope of ATP-43(B)/MTP-43(B)

This publication contains background information on organisation, communications, shiphandling and emergency procedures.

INTENTIONALLY BLANK

CHAPTER 2

CONCEPT OF SHIP-TO-SHIP TOWING

Section 1 - Principles of Operation

0201. The Purpose of Towing

The technique of ship-to-ship towing provides a means of moving to safety ships which become casualties as a result of enemy action or occurrences such as collision, grounding, fire or equipment failure. The success of an attempt to tow a casualty depends on the ability in the prevailing circumstances of the towing ship or ships to transmit the necessary motive force to the casualty taking into account the strength, configuration and interoperability of the respective towing systems and equipment.

0202. Forces Involved in Towing

a. The towing hawser provides the link through which the towing force is transmitted from the towing ship to the casualty. The force required to tow a ship through the water is dependent on the total resistance of the tow which comprises the sum of four basic components:

(1) Hydrodynamic drag, comprising the frictional and residual resistance of the casualty's hull moving through the water. This may be increased by the effect of hull damage.

(2) Propeller resistance, which may be very significant if the shafts are locked for any reason. When possible, the casualty's propellers should be free to revolve in order to reduce this resistance subject to lubrication being available for the shafts.

(3) Resistance due to the action of waves on the casualty's hull.

(4) Resistance due to the action of wind on the casualty's hull and superstructure.

b. In a smooth sea, with little or no wind, the tension in the tow required to maintain a steady towing speed is theoretically constant (See Annex B). In practice, however, the tension will vary considerably due to the relative motion between the ships as they move through the water and the effect of sea and wind on them. The towing resistance or load can vary suddenly from zero to the limit of the hawser's strength causing shock loading on the towing system and on both ships.

c. In order to avoid parting the hawser or other components of the tow, a means of reducing shock loading must be employed. Certain vessels such as tugs have towing machines with the ability to limit the load on the hawser to a maximum preset value. However, since warships and auxiliaries do not normally have towing machines, other methods must be employed. The basic principle used is that of delaying the build up of stress by allowing the distance between the towing ship and the casualty to increase gradually against a restraining force supplied by the towing system. In NATO ships this is achieved by one or both of the following ways:

(1) By allowing the weight of the towing hawser to maintain a curve or catenary as it hangs between the two ships, changing shape as the horizontal load applied at the end of the tow varies.

(2) By using a towing hawser made of a suitable synthetic fibre material that stretches under load.

0203. Spring in Towing Rig - Wire Rope Hawser

a. It is essential to maintain a catenary in the tow when the hawser is made of wire because its low elasticity renders it incapable of absorbing heavy shock loads. The change in distance between the ships and hence the change in shape of the catenary absorbs energy and so reduces the shock loading on the towing system. As the distance between the ships increases due to the towing ship increasing speed or some other forces acting on the casualty, the catenary is extended and becomes shallower, so increasing the horizontal forces acting to draw the ships closer again. If sufficient catenary is maintained, a substantial increase in the distance between the ships can be accommodated without dangerously overloading the towing system. Conversely, as the distance between the ships decreases, the weight of the towing hawser will cause the catenary to go deeper and the horizontal forces acting on the ships will decrease. The change in the shape of the catenary thus causes energy to be dissipated over a period of time and permits the towing ship to take corrective action in order to return the catenary to its 'steady state' shape.

b. A proper shape of catenary must be maintained in order that it may achieve its purpose. The weight of the towing hawser and chain cable used in the towing rig is normally sufficient to form a satisfactory catenary, the major part of which should hang below the surface of the sea. The towing rig should never be subjected to loads which cause it to lift clear out of the water. If conditions require a deeper catenary in order to increase the 'spring' in the rig, extra weight can be added by veering more chain cable or by hanging a weight such as an anchor on the outboard end of the chain cable already in use. Too deep a catenary may cause the rig to foul on the sea bed; too shallow a catenary may allow the rig to become taut, overloading it and probably causing failure.

0204. Spring in Towing Rig - Synthetic (Man-made) Rope Hawser

a. Synthetic fibre is being increasingly used for the manufacture of towing hawsers and pendants and has replaced wire in many such applications. Polyamide (or Nylon) is more commonly used than other synthetic fibres on account of its elasticity and ability to stretch up to 50 per cent beyond its normal length before parting. It will also return rapidly to its normally length when the load is removed. The function of the catenary used with wires is enhanced by the elasticity of the synthetic hawser. The energy imparted to the tow by the movements of the ships relative to one another is absorbed by the synthetic hawser like a spring and greatly reduces the shock loading on the system. The tension in the hawser is proportional to the applied force which, in turn, is proportional to the distance between the ships. The further the ships move apart, the greater is the load on the hawser and hence the tension drawing them together again. It is not unusual for the whole length of the hawser to be out of the

water under normal towing loads. Under some circumstances this is desirable because the towing resistance is reduced and it avoids the risk of damage to the hawser due to fouling the sea bed or objects in the water. However, for long heavy tows or tows in rough weather it may still be necessary to veer chain cable to further reduce shock loading.

0205. Precautions to be Taken When Using Synthetic Hawsers

a. **Breaking**. Because of their elasticity, synthetic hawsers can store tremendous amounts of energy when under tension. If a hawser breaks due to overloading this energy is instantly released in a snap-back action which can be extremely violent and potentially destructive. Personnel should be warned of this danger and never stand in the direct line of pull of a hawser under tension.

b. **Hockling**. When a load is placed on a 3-strand synthetic line the individual strands will rotate relative to one another as the line stretches. Whenever possible the load should be reduced gradually in order to allow the strands to recover as the line returns to its normal length. A sudden release of the load can result in `hockling', a condition in which the individual strands become unlaid relative to one another and the line becomes seriously weakened at that point. Hockling does not occur in plaited or braided (non-rotating) lines and these types are accordingly recommended for use in towing hawsers.

c. **Tattle Tale Cord**. In order to determine when the tension on a synthetic hawser is approaching the danger point a `tattle tale' cord should be used (Fig 2-1). This is a light cord of predetermined length which is secured to the hawser at two points a specified distance apart. As the hawser stretches under the load, the distance between the attachment points increases so that when the cord becomes taut the hawser has reached its maximum safe load. Maximum safe load is defined as a fraction of the breaking strength e.g. a hawser which has the capability of stretching 25% of its length before reaching its maximum safe load would have a tattle tale cord of 3.5m secured to two points on the hawser 2.8m apart. If stressed beyond the maximum safe load the hawser could suffer permanent damage and there is an ever increasing danger of it breaking. A tattle tale is NOT used with natural fibre or wire.

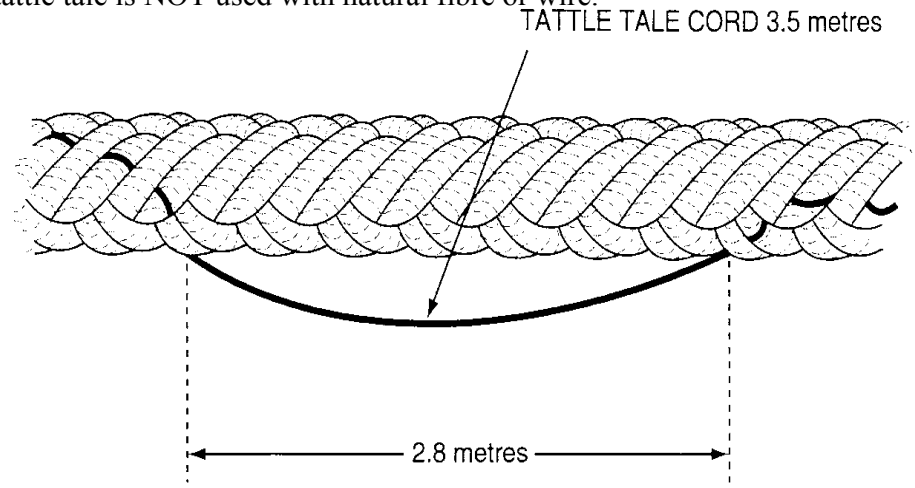

Fig 2-1. Example of a Tattle Tale Cord Fitted to a Towing Hawser

Section 2 - Organisation and Command

0206. Officer in Tactical Command (OTC)

The OTC of an Allied naval force in which a casualty occurs will decide whether an attempt is justified to tow the casualty to safety taking into account all relevant factors including:

a. The distance to a suitable port.

b. The tactical and navigational situation.

c. Current and expected weather conditions.

d. The importance of the casualty.

e. Availability and suitability of ships for towing.

In the event of a tow becoming separated or requiring ships to be detached from a force the OTC or Operation Control Authority (OCA) will normally delegate tactical command of the tow to the senior ship involved.

0207. Towing Control Ship (TCS)

The ship taking a casualty in tow or the senior towing ship if more than one is involved will be known as the Towing Control Ship and is to assume control of the operation unless the OTC directs otherwise:

The TCS is responsible for:

a. Determining the condition of the casualty and the availability of her equipment.

b. Ordering the towing rig to be used and the procedure for passing the tow.

c. The safe conduct of the procedure for passing the tow and getting the tow underway.

d. Selecting the towing course and speed, taking into account:

(1) The instructions of the OTC or OCA.

(2) The destination of the tow.

(3) The condition of the casualty.

(4) The tactical and navigational situation.

(5) Current and expected weather and sea conditions.

0208. Communications

a. Communication between the ships involved is of the greatest importance during all phases of the towing operation. It may be advisable to send a party to the disabled ship prior to the operation to discuss all details.

b. Although radio communications will be subject to the EMCON policy in force, adequate communication can be achieved by one or more of the following means:

(1) Flashing light.

(2) Flag hoists using groups from ATP-1(C) Vol II and/or the International Code of Signals.

(3) Paddles, hand held flags, wands or lights using signals from ATP-16 Chapter 4 to indicate:

Heave around
Avast (Stop)
Slack off
Hooked up or Connected
Commence unrigging
Prepare to slip/slip the tow
Emergency breakaway

These are illustrated in Fig 2-2.

(4) Whistle and voice signals from ATP-16(B) Chapter 4 for use when passing lines:

1	whistle blast:	'Stand By'	- Prepare to receive my gun line, bolo line or heaving line.
2	whistle blasts:	'Ready'	- We are ready to receive your line. All personnel have taken cover.
3	whistle blasts:	'Lines passed'	- By delivering ship: All lines have been passed.
		OR 'Lines lost'	- By receiving ship: Line lost. Pass another line.

c. Submarines are poorly equipped for visual communications. If radio is used, hand held receivers are recommended in order to avoid having to relay messages by word of mouth or intercom between the bridge and communications office.

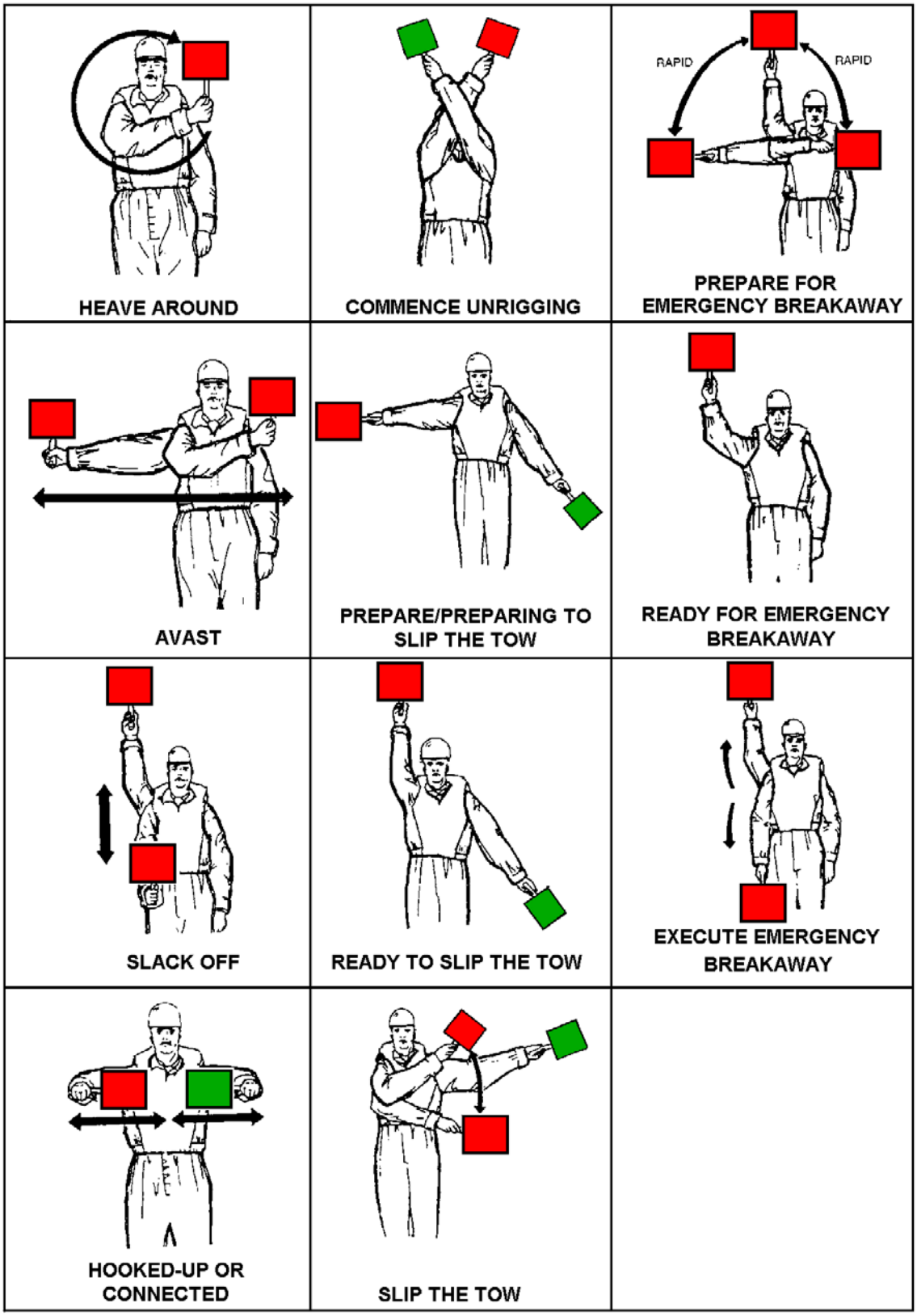

Fig 2-2. Paddle/Wand/Light Signals for Use in Ship-to-Ship Towing Operations

CHAPTER 3

TOWING OPERATIONS

SECTION 1 - GENERAL CONSIDERATIONS

0301. Towing Rigs

a. As a general rule warships and auxiliaries are provided with suitable towing points and a towing hawser so they are capable of towing a vessel of similar size to themselves, or passing their tow to another ship so they themselves can be towed. The ways in which ships' towing equipment can usually be rigged are various and will depend on the condition of the casualty. Rigs employing a single hawser are suitable for use in fair weather. Those employing two hawsers connected together are preferable for long ocean tows or in heavy weather. However, the urgency of the situation or navigational hazards may dictate the use of a single hawser rig, even in heavy weather, in order to get the tow underway, a second hawser being added when conditions permit.

b. If the casualty's normal towing arrangements are not available a jury rig must be used.

0302. NATO Standard Towing Link

To enable ships of different nations to tow each other a standard end link to be fitted at the end of the towing hawser presented by the ship providing the equipment to the other ship has been introduced. Details of this standard link are given at Annex A (Stanag 1289).

0303. Limitations in Submarines

In most submarines it is not normally possible to use the anchor cable, bollards or fairleads for towing or for personnel to work with towing equipment on the casing while at sea. It may therefore be necessary for the TCS to provide the towing rig and in some cases to connect her hawser to the submarine's equipment which may be a special chain cable a wire pendant or short synthetic towing hawser. The inboard end of the submarine's equipment is usually connected permanently to a towing slip which can be operated remotely.

SECTION 2 - PREPARATIONS FOR TOWING

0304. Condition Report

The casualty should report her condition to the TCS by the quickest means in order to enable the TCS to select the appropriate towing rig. This report should include all information relevant to the conduct of the tow, for example the state of:

a. Propulsion System including propellers whether locked or unlocked.

b. Hull, including any weakened bulkheads.

c. Steering gear including the set of the rudder, if inoperable.

d. Deck machinery including capstans, windlasses and winches.

e. Towing equipment. (This should include the type of towing hawser, its length, diameter and the dimensions of the end fitting if different from the NATO Standard Towing Link).

f. Anchor and cable arrangements and whether operable.

g. Crew, including medical casualties.

h. Communications.

0305. Selection of Towing Rig

The towing rig to be ordered will be selected by the TCS taking into account:

a. The condition of the casualty and the manner in which it will best be towed.

b. The tactical and navigational situation.

c. The weather conditions.

d. The distance to the ordered destination or rendezvous.

0306. Preparation of Equipment

a. **Casualty**. The casualty should prepare to be taken in tow using available equipment and manpower.

b. **TCS**.

(1) The TCS should prepare to take the casualty in tow.

(2) If the casualty is unable to make her condition report or to prepare her own towing equipment, the TCS should prepare to provide the towing hawser and any other items required.

SECTION 3 - THE APPROACH TO THE CASUALTY

0307. Deciding on the Line of Approach

a. The plan of approach must allow for two factors: holding the ship close by for long enough to pass the tow and getting the tow under way. There are two basic approaches that can be made: a *converging approach* that ends up just ahead and parallel to the ship to be taken in tow and a *down-wind approach* at right angles to her heading that enables the ship to be held stern-to-wind close enough for the tow to be passed. Once the tow has been passed, the next problem is to gather way. This is more easily done if the two ships are on parallel headings because, once the ship under tow has headway, all that will be necessary will be to induce a yaw in the required direction and the hydrodynamic forces acting on the hull will bring her round. If the two ships are at right angles to each other, the inertia of the disabled ship and unfavourable wind may well hold the towing ship 'in irons' and prevent her from turning to a suitable course. For this reason, it is usual to adopt a converging approach unless there is a great difference between the rates at which the two ships will drift. If the wind is so strong and the drift rates differ such that it will be impossible to lie ahead of the disabled ship for long enough to pass the tow, then a stern-to wind approach should be chosen.

b. Before deciding which approach to use, the Captain of the towing ship should take time to assess the attitude and rate of drift of the disabled ship and compare them to those of his own. It is, therefore, good practice to pass close astern of the disabled ship at close range beforehand and note her loading and trim and estimate her rate of drift. It is particularly important to observe whether she has acquired head or stern way and whether she is lying beam on or bow or stern to wind. The next points to consider are: the relative rates of drift between the two ships when stopped, and how one's own ship will lie. The questions to be asked are: Is one's own ship likely to drift faster than the other? Will one be able to hold one's own ship stopped in various attitudes (head-to-wind, across-wind and down-wind)? What attitude is it likely that one's own ship will adopt as she slows down and stops near the disabled vessel? All this information should lead to making a sensible assessment of the best method of approach to pass the tow and get the tow under way. Variations on the two basic approaches, which depend on the heading and the rate of drift of the disabled vessel, are described in the following paragraphs. Much will depend on the prevailing circumstances and conditions, therefore Commanding Officers must use their best judgement at the time to determine the precise approach to be made.

0308. Converging Approach on the Windward Side of the Vessel to be Towed

a. This approach is advisable when the two ships have *similar drifting rates and attitudes* when stopped. Select an approach track that converges at an angle of 25° to the heading of the vessel to be taken in tow. The track should aim to pass 30 metres upwind across her bow. The gun line should be fired from forward at a range of about 50 metres before the bows come abreast. The gun line and messenger should then be walked aft while the towing ship moves to a position 50 metres ahead of the casualty for the tow to be passed. There is little danger in making a close approach on the windward side of the casualty, provided both ships are lying beam-to wind, because a moving ship will not make as much leeway as a ship that is stopped. Once completely ahead, the towing ship will be clear. During the approach, the Captain must keep a careful watch on the other ship to observe whether she is drifting ahead or astern; if she is, he should alter the line of approach to allow for it.

b. The disadvantage of this method of approach is that it is difficult to regain a suitable position if contact is not made. Going astern to regain a position on the casualty's bow is inadvisable because the stern will fly into wind so it is usually best to go all the way round and make another approach.

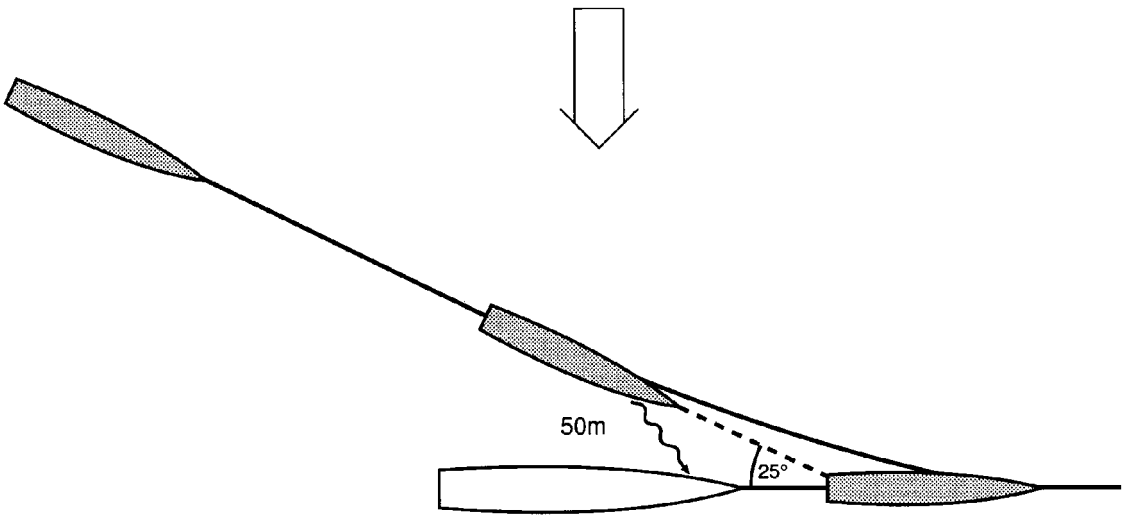

Fig 3-1. Converging Approach to Windward of the Vessel to be Towed

c. **Getting the Tow Under Way.** The Captain should keep the towing ship on a parallel heading to the other ship while the towing gear is being passed after which he can then go directly ahead when the tow has been secured. The ship being towed will tend to turn up wind as the tow gets under way, so the towing ship should steer gently towards the wind to try to keep ahead or fine on the bow until the towed ship has sufficient way to respond. The tow should not start turning to the final course until the towing hawser is under comfortable strain, the necessary amount of cable has been veered and a reasonable speed has been achieved, only then may the course be altered in steady steps.

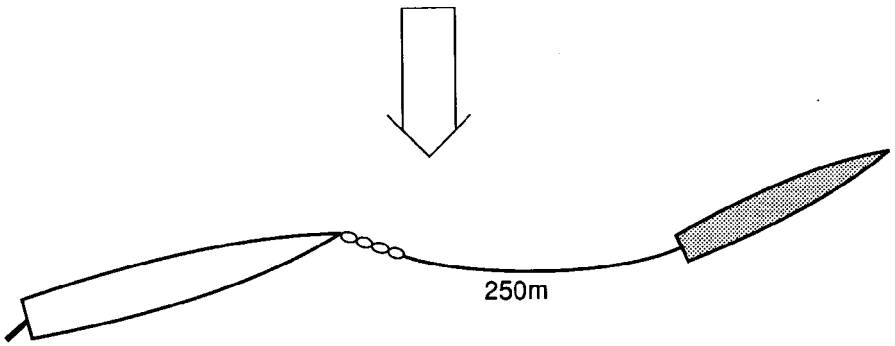

Fig 3-2. Getting the Tow Under Way

0309. Broad Converging Approach from the Lee Side

a. This approach should be used when one's *own ship is likely to drift faster than the casualty.* The approach is made from the leeward side of the disabled ship at an inclination of 45 degrees to her heading and the track should aim to pass 50 metres clear of her bow. In this method of approach, the gun line has to be fired to windward and a careful watch has to be kept on the relative movement between the two ships as the towing ship approaches the bow of the other. By putting the towing vessel up wind when ahead of the casualty, it has the advantage of placing her in a better relative position for getting the tow under way. However it will be difficult to hold the bow towards the wind so the tow must be secured quickly otherwise the towing ship will drift downwind of the ship to be taken in tow and will end up in an awkward position.

b. While the tow is being passed, the Captain will require frequent reports from the quarterdeck in order to make certain that the two ships are not drifting together.

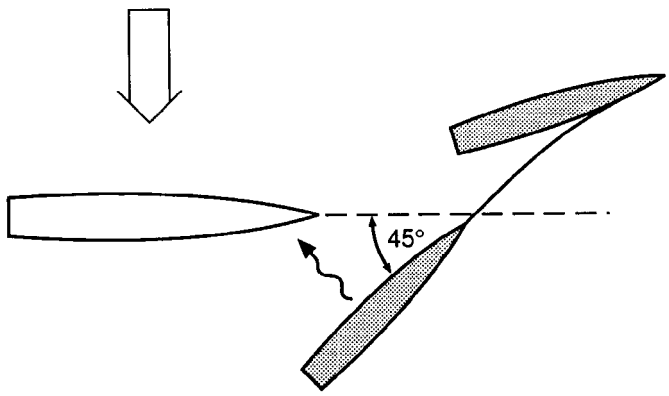

Fig 3-3. Converging Approach from Leeward

0310. Downwind Approaches

If there is likely to be a marked difference between the attitudes and rates of drift of the disabled vessel and the towing vessel, an alternative approach to the converging approach may have to be used. For warships this will usually be an approach directly down wind because they steer better at slow speed with the wind astern rather than ahead and it is also easier to hold them stopped stern-to-wind. The possibility of a following sea washing over the quarterdeck and endangering men handling the tow must, however, be remembered when deciding to approach down wind. The basic downwind approach plan is shown in Fig 3-4, however, the angle at which the disabled ship is lying in relation to the wind and rate and direction of her drift have to be considered carefully and the approach plan modified as outlined in sub paras b, c and d.

a. **Basic Downwind Approach to a Ship Lying Broadside to the Wind.** In this situation, the towing ship should aim to cross 30 metres clear across the bow of the ship to be towed. Watch carefully for any sign of the disabled ship drifting ahead and, if the gap appears to be narrowing, make a substantial early alteration away. Then, when a position of advantage on the bow has been attained, alter back to run in from further ahead. Always make the final part of a downwind approach at slow speed, but retain sufficient speed to be able to steer accurately on passing the bow of the disabled ship. The best position from which to fire the gun line is from forward. The messenger should already be led outboard and aft to speed up passing the tow but care has to be taken to keep the propellers clear of the messenger and towing hawser while they are being paid out. While the tow is being secured the Captain should keep his ship a short way down wind of the disabled ship's bow by holding her stern into the wind. Once the hawser is secured to the towing hook, the towing ship should gather way slowly and gradually take the strain. Getting the tow under way can be difficult because the towed vessel will be at right angles to the towing ship while the tow is being passed and will tend to turn upwind as she gathers speed. The towing ship should start by moving on to the lee bow of the tow and trying to turn beam-on to the wind to avoid putting undue strain on the towing hawser. The Captain should not pull a disabled ship that is stopped in the water at right angles to her heading as this may part the tow.

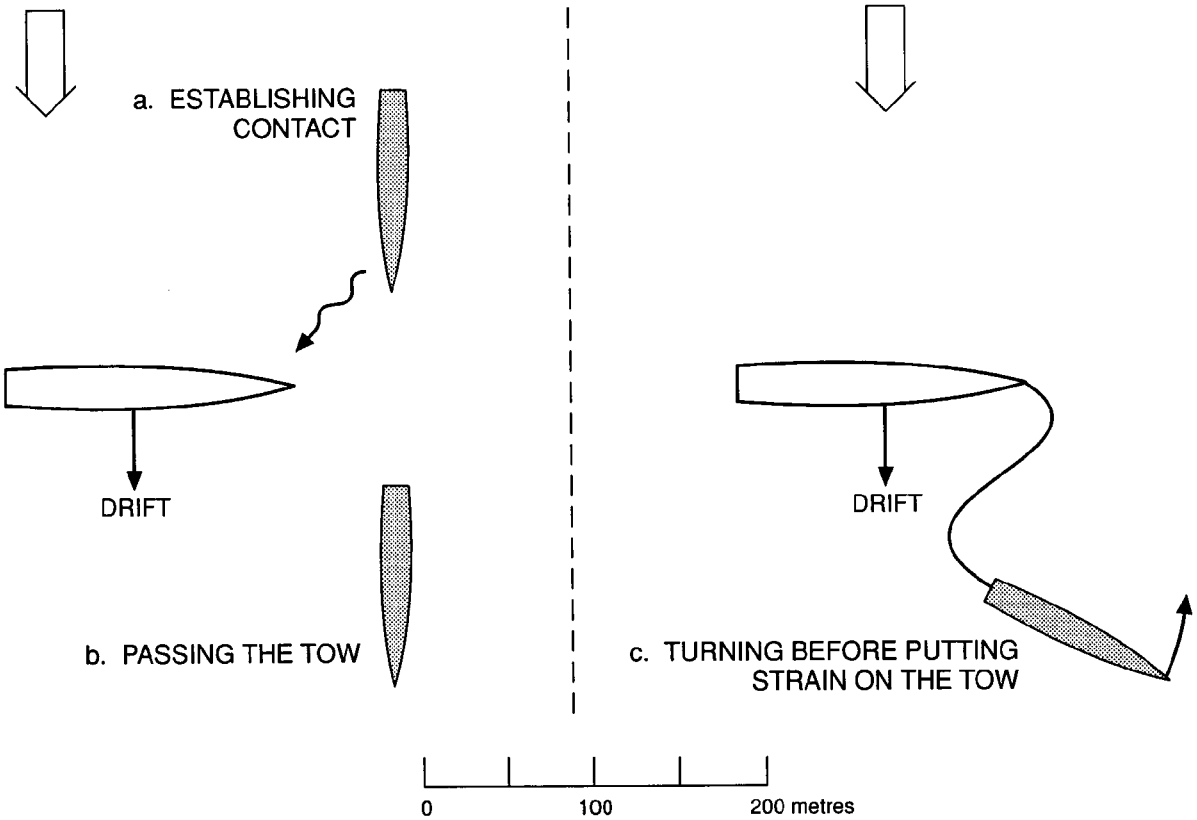

Fig 3-4. Basic Downwind Approach to a Ship lying Broadside on to the Wind

b. **Downwind Approach to a Disabled Ship with the Wind Abaft her Beam.** A disabled ship that is lying with the wind abaft her beam will be making headway and it will be dangerous to attempt to pass close across her bow. If a downwind approach is to be made, the towing ship must keep well ahead of the disabled ship in order not to risk collision. At the same time she must pass close enough for the gun line to reach as they pass. Fig 3-5 shows the position that should be reached to pass the tow conveniently. Once past the bow, there should be no difficulty in keeping the stern to wind conveniently close to the other ship. However, with one ship drifting ahead and the other directly downwind and therefore with no lateral drift, the relative positions of the two ships will change as shown by position C in Fig 3-5. This may complicate passing the tow and make getting the tow under way difficult. This can be remedied by turning to a heading parallel to that of the disabled ship while the tow is being paid out thereby preventing the gear being nipped when a strain is put on it. A large ship will drift downwind faster than a small ship, so the Captain will have to take care to move clear ahead if this is likely to happen.

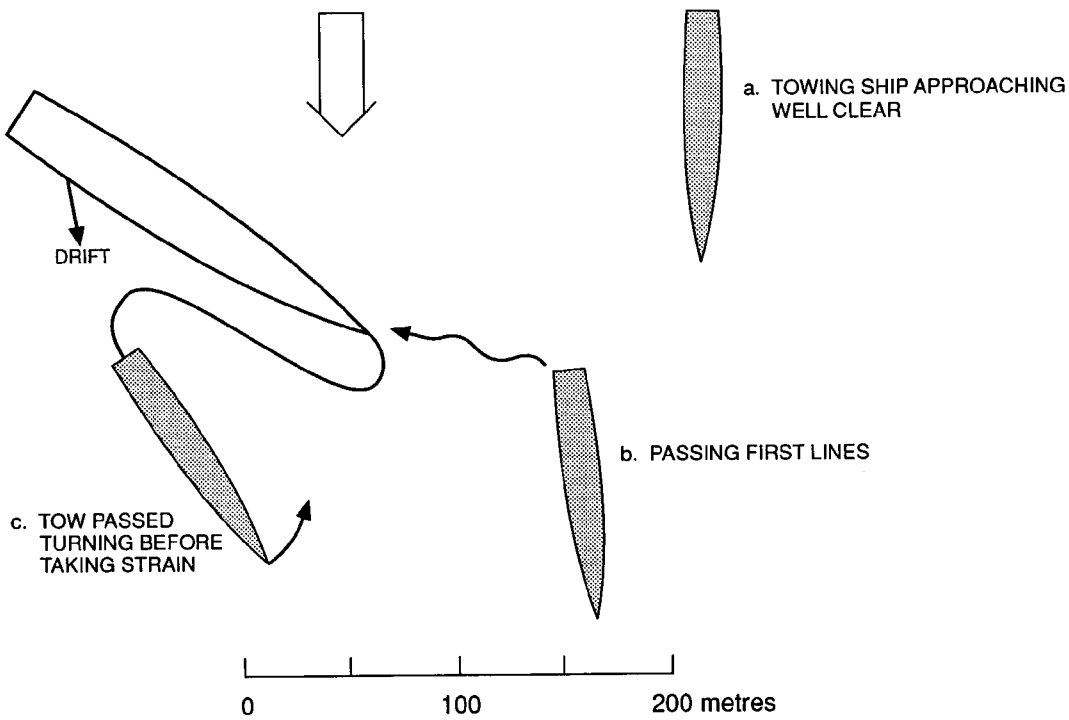

Fig 3-5. Downwind Approach to a Vessel with the Wind Abaft her Beam

c. **Downwind Approach to a Vessel lying with the Wind on her Bow.** If the disabled ship is lying with the wind before her beam, she will be making slight sternway so it should be possible to approach close across her bow without danger. The aim should be to stop just beyond her bow as shown in Fig 3-6 and turn under low power before starting the tow. The strain must be taken very cautiously because ships will be on nearly opposite headings and it will be necessary for the towing ship to turn at rest side-on to the wind before getting the tow under way.

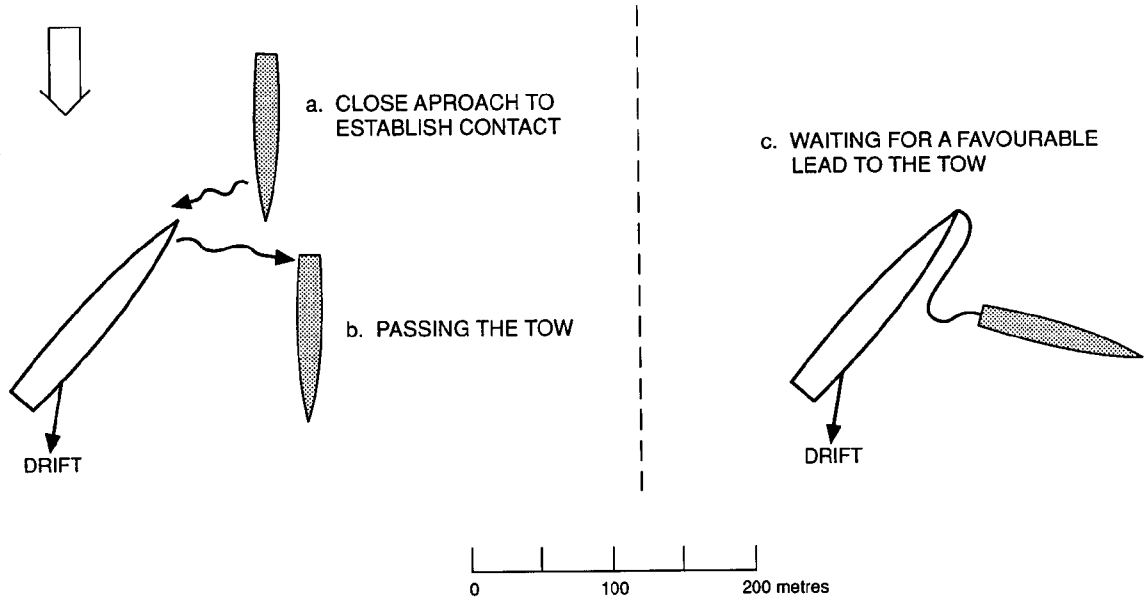

Fig 3-6. Downwind Approach to a Disabled Ship lying with the Wind before the Beam

0311. Approach to a Ship lying Head to Wind

a. A ship with high superstructure aft or with a hole in the bow will lie head into wind when stopped. Making a downwind approach will give good control of the towing ship while the tow is being passed but has the disadvantage of putting her in an awkward position from which to get the tow under way because the two ships are likely to be on opposite headings. A tug, which is a handy vessel with the towing deck close to the bridge, will probably make a downwind approach to a ship lying head to wind. However, a warship will usually find that crossing at right angles to the disabled ship's heading is more suitable. An approach at a right angle makes it easier to get the tow under way and avoids the unfortunate predicament of the warship being held 'in irons' by the wind and the tow. When making this approach, the Captain of a warship must be careful not to drift on to the bow of the disabled ship; once past, he must keep the stern close to her while keeping his ship at right angles to the wind. Under these circumstances, the towing party must handle the towing gear quickly as there will be little time to spare if the gun line misses.

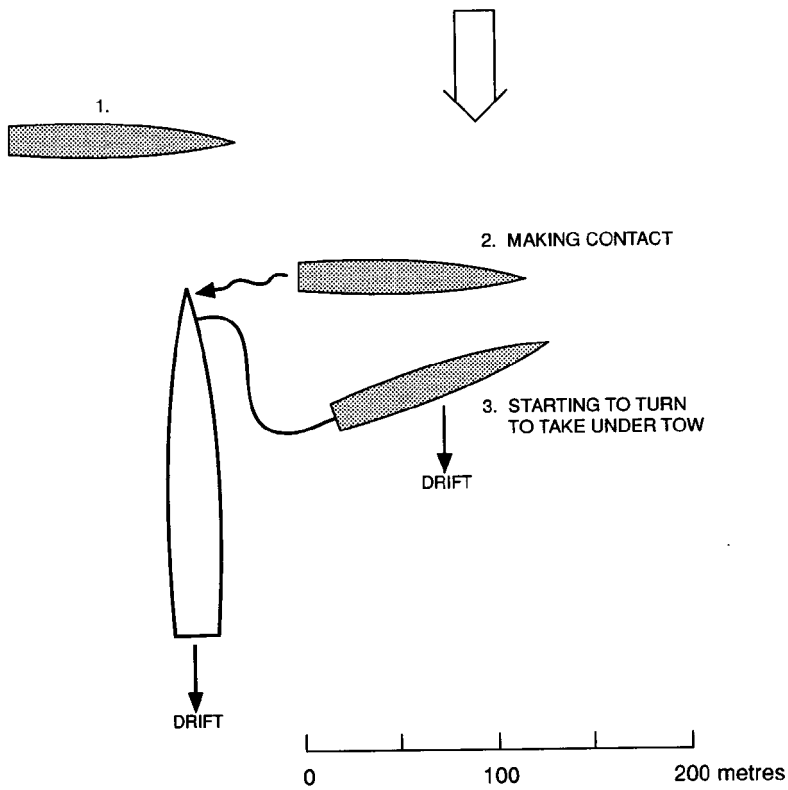

Fig 3-7. A Crossing Approach to a Ship lying Head-to-Wind

b. A *head-to-wind approach* to a disabled ship lying bows-to-wind is unsuitable for a warship. It is usually difficult to hold a warship into the wind and she will fall off as soon as her engines are put astern and may start drifting towards the bow of the other ship.

0312. Towing a Ship Stern First

a. It may sometimes be necessary to tow a ship stern-first because she has damaged her bows. In this case the recommendation would be to make a down wind approach, stop by the *stern* of the disabled vessel and hold the towing ship stern-to-wind while passing the tow; this should give plenty of time to pass the tow.

b. If the ship to be towed stern-first is lying across the wind, it will be necessary to assess the mutual drift rates and attitudes of the two ships in the same way as for an ahead tow. Then choose either the *converging* or the *down wind* approach best suited to the conditions. Getting under way in these circumstances will be more difficult because it is impossible to steer the towed ship and towing her stern-first create turbulence and drag. Since trim affects the aspect in which a towed ship lies in relation to the wind, her trim should be adjusted to reduce her yawing. It must be appreciated, however, that this will depend on the damage and the power available and will not always be possible.

SECTION 4 - PASSING AND CONNECTING THE TOWING RIG

0313. Method of Passing the Tow to a Surface Ship Casualty.

a. **Initial Contact Line**. The first line should usually be passed by the TCS as she is free to manoeuvre while doing so. The following means can be used:

(1) Line throwing rifle.

(2) Heaving line or bolo.

(3) Rocket.

(4) Float.

(5) Boat.

(6) Helicopter.

b. **Messenger and Towing Hawser**

(1) Differences exist between the procedures of individual Nations but the principles of sound seamanship should be applied on every occasion. No problems should arise provided that the TCS orders the rig to be used and establishes his intended procedure.

(2) The messenger and towing hawser may be passed by either the TCS or casualty, depending on the rig and power available.

(3) The normal sequence of establishing a tow should be:

(a) Pass initial contact line	Usually TCS
(b) Pass messenger (c) Pass towing hawser	TCS/Casualty
(d) Connect towing hawser to own towing fittings or cable	Receiving ship
(e) Veer towing hawser(s) so that tow is clear of both ships	As ordered by TCS
(f) Secure tow ready to take strain	Both ships

0314. Method of Passing the Tow to a Submarine Casualty

a. **Initial Contact Line.** The first line may be passed by any of the means shown in paragraph 0313 but a submarine's fin (sail) is a small target when attempting to pass a line from a surface ship and it is normally preferable for the submarine to pass the line using line-throwing equipment.

b. Some submarines are equipped with towing hawsers and messengers; these should be used when available.

c. In the majority of cases the following arrangements and procedures apply: (See Fig 3-8)

(1) *Messenger*. The TCS must provide the messenger which is led through snatch leading blocks on the submarine's bridge and down through the conning tower hatch into the control room where the crew can manhandle it and so heave across the towing hawser. If an additional messenger is required it should be joined to the preceding one in such a way as to permit it to pass freely through the system of leading blocks. The towing hawser should be secured to the final messenger at least 1.5 metres from the end fitting to enable the hawser to be connected easily to the submarine's towing pendant.

(2) *Connecting the Towing Rig*. The submarine's towing pendant, connected at one end either to a length of chain chafing cable or direct to the towing slip, is fitted along the structure to the fin and is secured at intervals by metal clips and/or cement. The other end of this pendant is fitted in an accessible position near the base or the top of the fin, and is brought up to the bridge to be connected to the towing hawser provided by the TCS. The towing ship should provide a shackle to join the towing hawser to the submarines towing pendant.

d. **Blow Tow**. (see Fig 3-9). Some submarines are fitted with an arrangement known as 'Blow Tow'. The following procedures apply:

(1) *Initial Contact Line*. The submarine ejects by means of compressed air a buoy attached to some 110 metres of floating light line. The buoy, which may travel up to 100 metres from the submarine, should be picked up by the TCS, a manoeuvre which may bring the towing vessel very close to the submarine.

(2) *Messenger*. A 60-metre messenger is connected to the end of the initial contact line and this is connected to a 60-metres length of chain cable.

(3) *Connecting the Towing Hawser*. The TCS should connect her towing hawser to the outboard end of the submarine's chain cable using a suitable shackle or detachable link.

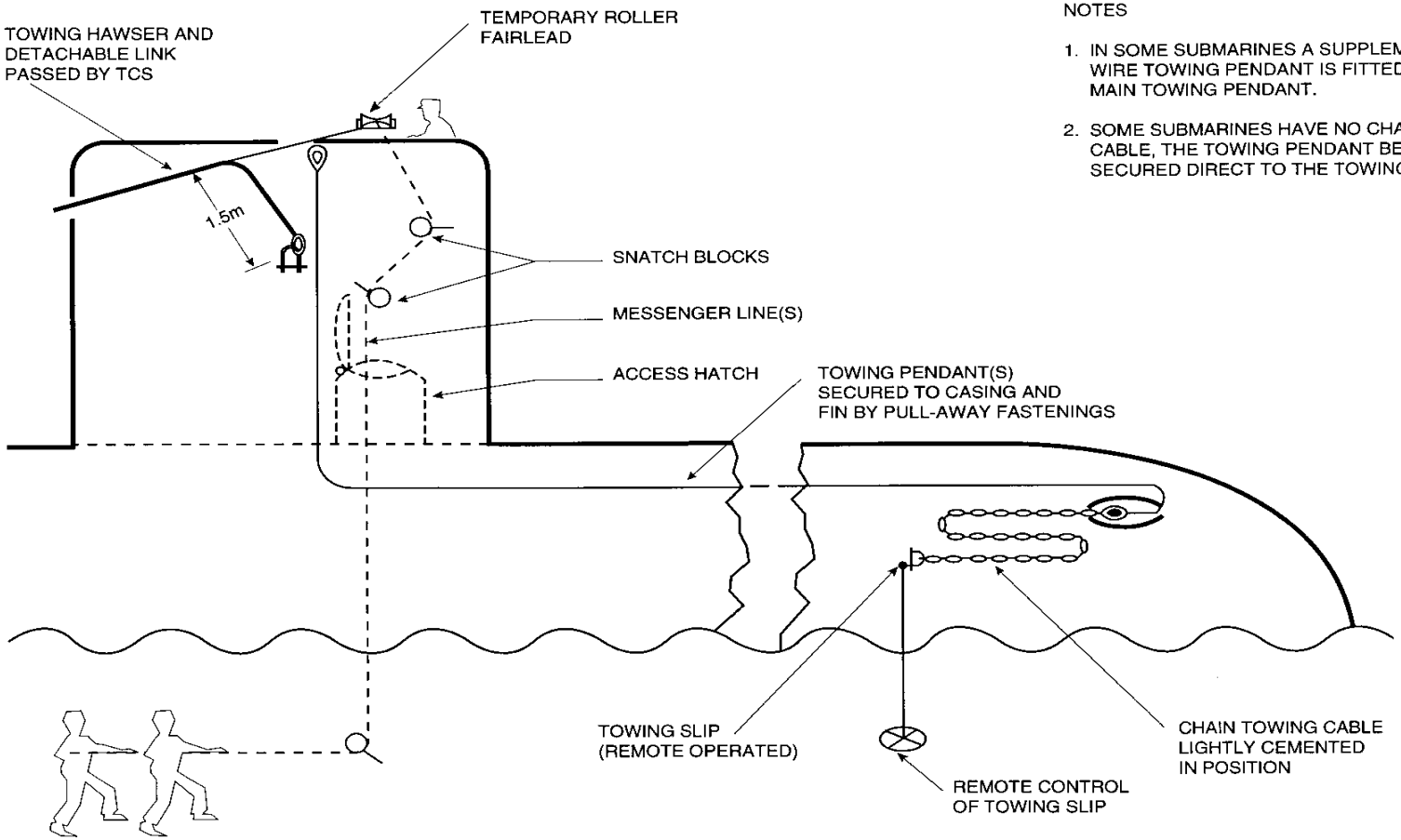

NOTES

1. IN SOME SUBMARINES A SUPPLEMENTARY WIRE TOWING PENDANT IS FITTED TO THE MAIN TOWING PENDANT.
2. SOME SUBMARINES HAVE NO CHAIN TOWING CABLE, THE TOWING PENDANT BEING SECURED DIRECT TO THE TOWING SLIP.

Fig 3-8 Submarines - Typical Bridge Fin Towing Pendant Arrangements

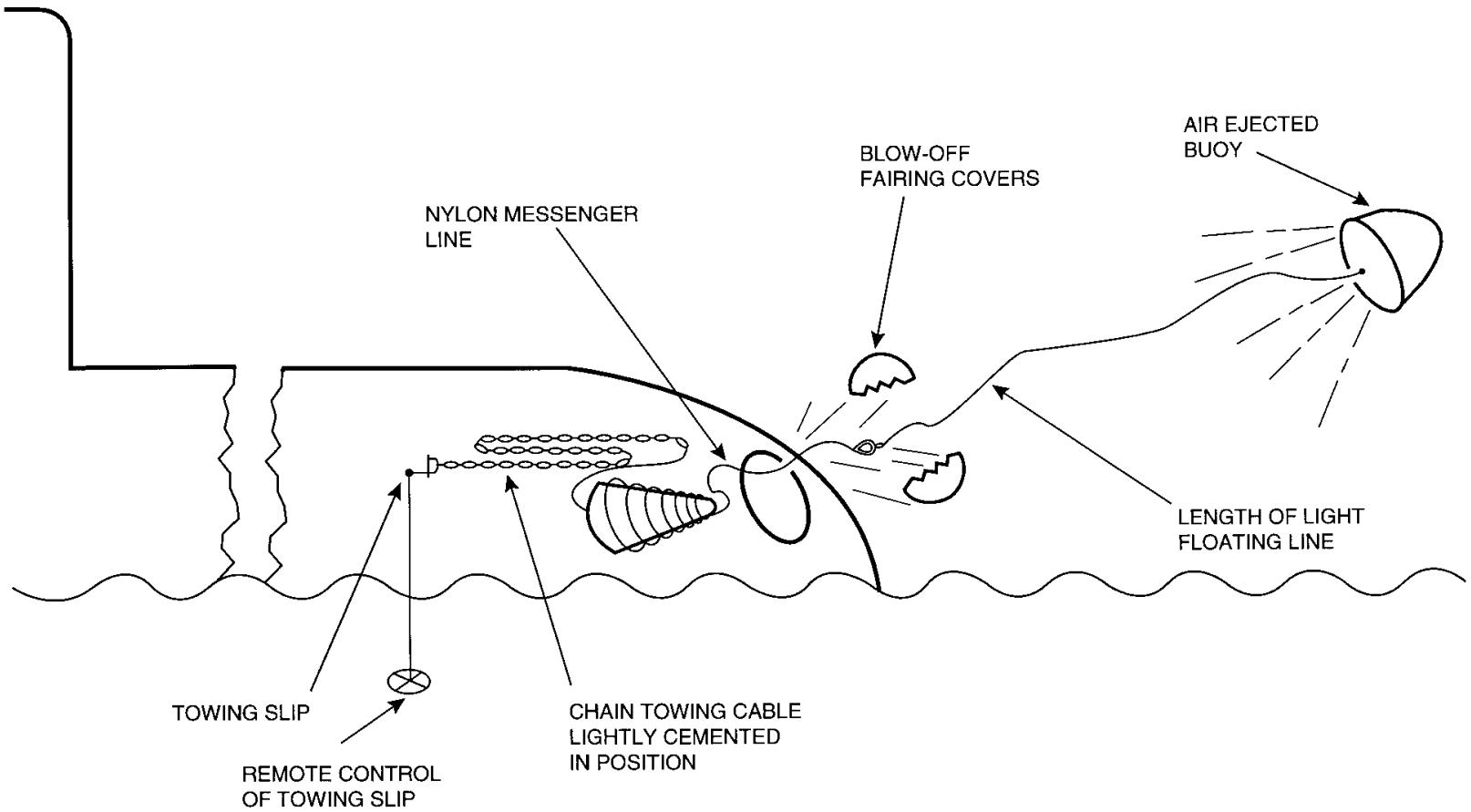

Fig 3-9. Submarines - Typical Blow-Tow Arrangements

0315. Securing the Towing Rig.

In order to facilitate the slipping of the tow it should be secured in the following ways:

a. **TCS**. With all rigs the TCS should secure the rig on her after towing slip.

b. **Surface Ship Casualty**

(1) *Towed by the Bow*. The chain stopper on the anchor cable should be secured just out-board of a joining shackle (detachable link) so that the cable may be broken and the tow slipped.

(2) *Towed Stern First*. The rig should be secured on the after towing slip.

c. **Submarine Casualty**. See para 0303.

d. **Jury Rig**. If a jury rigged tow is necessary and it cannot be secured in a manner that provides a facility to slip the rig then appropriate cutting equipment must be provided. It should be noted that whilst an axe is suitable for this purpose, if the towing hawser is synthetic rope, a wire hawser will require special cutting or burning equipment. Great care must be taken to protect personnel involved if an emergency situation arises that requires a tow under tension to be cut.

0316. Precautions Against Chafing

Care must be taken to prevent wear and overstraining of components of the towing rig due to chafing where they come into contact with fixed structures such as fairleads, hawse pipes and bollards.

SECTION 5 - CONDUCT OF THE TOW

0317. Getting a Tow Under Way

a. **General**. It is advisable to move initially in the direction of least strain; this is usually the direction in which the ship to be towed is lying. The Captain of the towing ship should increase power in small steps so that the strain on the towing hawser rises gradually and not in jerks. A ship under tow will tend to turn into wind as she gathers way. This must be allowed for so that the towing ship does not end up in a position where she cannot manoeuvre. The best position from which to start towing is on the windward bow of the ship to be towed but it may sometimes be difficult to manoeuvre into this position. Once the tow is under way, the towing ship can make cautious alterations of course to induce a yaw in the towed ship and so bring hydrodynamic forces to bear to make her alter course.

b. **Submarines**. Before getting the tow underway, in the case of submarines fitted with a towing pendant secured on or near the fin (See paragraph 0315), it is necessary to deploy the pendant from the fin and casing and the chain cable, if used, from its stowage. The TCS should start by deploying the pendant between 45 and 90 degrees on the appropriate bow of the casualty, using the minimum strain necessary to detach the pendant from the fin and casing, and should then work ahead to a position about 15 degrees on the bow in order to deploy the chain cable.

c. **Shallow water**. In shallow water there may be a risk of the towing hawser touching the sea bed and snagging on an obstruction. If the depth seems likely to be critical, care should be taken to reduce the catenary of the tow as much as possible.

0318. Determining the Speed of a Tow

The speed of a tow depends on the power of the towing ship, the strength of the towing hawser, the tonnage and type of ship under tow and circumstances and conditions prevailing at the time. The towing power of a tug is usually expressed as *bollard pull* and the strength of the tug's towing hawser will match its maximum bollard pull. However, the power of a warship will usually be capable of exceeding the breaking strain of her towing hawser, so it will only require comparatively low propulsion power to conduct a tow for which she has provided the hawser. Examples of the approximate pull required in a tow to achieve a given speed for a ship of a given type and displacement are shown in Annex B. It should be noted that these examples assume the tow is conducted in calm weather and the bottom of the towed ship is clean.

0319. Factors of Safety. To calculate a safe loading on a towing hawser a *factor of safety* should be applied. This factor of safety, usually between 4 and 7, is a divisor of the towing hawser's breaking load. For example, if a towing hawser has a breaking load of 40 tonnes and a factor of safety of 4 is considered appropriate, the towing hawser should not be subjected to a loading greater than 10 tonnes. In selecting the appropriate safety factor the following points should be taken into consideration: the urgency of the tow versus its duration, the weather forecast, whether the towed ship is yawing and whether she has a foul bottom. For long distance tows, a high factor of safety should be applied to reduce the safe towing pull that should be used.

0320. Towing

a. Provided that the ship being towed is riding comfortably astern and not yawing, there should be no particular problems once the tow has reached its towing speed. Where there is a swell, the tow should be of a length that allows both ships to rise together on the crests and fall together in the troughs of the waves. If the bight of a wire towrope starts snatching and breaking surface, it should either be lengthened, remembering the depth of water, or speed should be reduced. Any large alteration of course should be made in steps to maintain a steady strain on the towing hawser and prevent the catenary sagging and tautening.

b. In situations where there is a risk of collision, decisive action must be taken early if the tow has to give way. This is particularly important at night as the lights of a tow can be confusing and, especially if the tow has taken a sheer, an approaching ship may see different coloured sidelights on the towing ship and towed vessel.

0321. Adjusting the Catenary

a. A change of weather or towing speed may require the TCS to order the catenary of the rig to be adjusted when a wire rope hawser is in use (see paragraph 0203). When the casualty is being towed by the bow, adjustment is best achieved by the casualty slowly veering or heaving in her anchor cable after the strain on the rig has been eased. With other rigs the most suitable method will depend on the arrangements of the particular rig in use.

b. It may become necessary to insert in, or remove from, the rig some additional weight such as an anchor in order to increase or decrease the `spring' of the catenary.

c. Submarines are unable to veer any cable or to add weight to the catenary, so this must be done by the TCS.

d. The effects of chafe on equipment passing through fairleads may also require the catenary to be adjusted from time to time.

0322. Yawing and its Correction

a. Most vessels under tow are expected to yaw but, provided the yaw is not excessive and the towed ship is able to steer, this should not cause difficulty. When, however, the towed ship is unable to steer, the yaw may become excessive and put heavy strain on the towing hawser at the end of each yaw. Uncontrolled yawing may also chafe and nip the cable in the hawsepipe.

b. It is possible to reduce yawing in a number of ways. Since not being trimmed sufficiently by the stern is the most usual cause of a tow yawing, the best way of correcting trim is to transfer liquids or ballast from one part of the ship to another as this will not alter her buoyancy. If this is not possible, trim may have to be corrected by flooding or adding ballast. If this has to be done, care must be taken not to alter her stability, reserve of buoyancy or seaworthiness in a dangerous way. The following other methods of reducing yaw have also proved successful, although most of them increase the drag and therefore increase the strain on the towing hawser.

(1) *Altering the Speed.* Yawing caused by list usually decreases at higher speed; yawing caused by trim usually decreases at lower speed.

(2) *Setting the Rudder.* If a ship's steering gear is damaged, her rudder may still be workable by hand. If the rudder can be set over, the ship under tow may be steadied at a constant angle of sheer to one side of the towing ship's track. It may be necessary to alter the lead of the tow to prevent a bad nip or unnecessary chafe.

(3) *Towing Another Ship Astern.* Securing a second rescue ship with a hawser astern of the disabled ship, and using this rescue ship to perform as a powered rudder has been successful on a number of occasions. The second ship keeps slight strain on her hawser and sheers to one side in order to keep the disabled ship on course. Alternatively the second ship can merely be added to the tow. A ship which had lost her rudder can be towed for a long distance in high winds and seas with a second ship astern to steady her course.

(4) *Shifting the Point of Tow.* A ship which is yawing to one side of the course may be steadied at a constant angle of sheer by shifting the point of tow aft on the inner bow. However, this is only practicable if the resultant angle of sheer is not too great, and if the towing hawser or cable is not subject to chafe.

(5) *Towing a Drogue.* A drogue streamed astern of the towed ship may steady her, especially if she is a fairly small ship with fine lines. The type of drogues which have proved successful are: a bight of 48mm buoyant rope, a length of ship's cable streamed on a messenger, a provision net filled with paunch mats that is towed on a two-legged bridle and a kite otter used for minesweeping.

(6) *Setting a Sail* in the towed ship either right forward or right aft may reduce the yaw. A boat's sail or a small awning can be used with an improvised rig.

(7) *Propellers.* A stopped propeller may drag in such a way as to reduce the yaw.

SECTION 6 - EMERGENCY RELEASE OR PARTING OF THE RIG

0323. General Considerations

a. It may become necessary for tactical reasons or in an emergency to release the tow with little or no warning and over-straining of the rig may cause it to part due to material failure.

b. Both ships should be capable of releasing the rig in emergency. The TCS in particular must be able to leave the tow at short notice in order to be free to manoeuvre as required to counter a threat.

c. Submarines are able to release the rig in emergency by operating the towing slip but when this has been done a submarine will not be able to recover or reconnect the rig.

d. A marker buoy and pendant of sufficient length should where possible be secured to the end of the rig before slipping taking into account the depth of water and length of the rig.

e. Whenever possible emergency release of the towing hawser should be carried out with the towing hawser slack.

0324. Recovery of the Rig

a. The ship retaining an end of the rig is responsible for recovering it. In the case of an emergency release this ship will usually be the casualty as the TCS is most likely to have slipped the rig in order to be free to manoeuvre to deal with the emergency. However, when the casualty is a submarine, or is otherwise unable to recover the rig, the TCS must do so when circumstances permit.

b. The rig should normally be re-established by the TCS passing the initial contact line. Where a length of chain cable has been slipped with the rig, the messenger must be strong enough to take its weight.

SECTION 7 - TRANSFERRING THE TOW

0325. Transferring to Another Ship

a. The TCS may be relieved of the tow by another ship before reaching the destination. The OTC should direct the relieving ship to assume control of the operation as TCS when she is ready to take charge of the transfer.

b. **Tow SITREP**. The TCS handling over the tow should prepare a Tow SITREP for the relieving ship before they rendezvous in order to permit planning of the transfer operation. This SITREP should cover the following:

(1) Towing rig in use. A brief description should be given of the chain cables, wires and hawsers in the rig by size (diameter in mm) and length, starting from the casualty's end and including any catenary weights in use.

(2) Details, including size(s), of interface arrangements at the end of the towing hawser(s), if other than the NATO Standard Towing Link.

(3) Condition of the casualty (see para 0305).

(4) Casualty's estimate of maximum acceptable speed in the prevailing conditions.

(5) Instructions of the OTC or OCA concerning the tactical situation, rendezvous positions and destination of the tow.

0326. Transferring to Harbour Tugs

Transfer will usually be achieved by the tug or tugs securing alongside the casualty while the emergency or ocean rig is unrigged. The procedure for unrigging should follow the reverse sequence of that used to establish it.

INTENTIONALLY BLANK

ANNEX A

NATO STANDARD TOWING LINK (STANAG 1289)

1. The NATO Standard Towing Link is to be used during ship-to-ship towing operations as an interface between the towing equipments of the towing ship and that of the ship towed whichever of the two ships provides the equipment, in order to improve interoperability.

2. Ships of less than 1000 metric tons displacement, other than tugs are not obliged to have a Standard Towing Link.

3. The interface will be at the presented end of one or both ships' towing hawsers.

4. The NATO Standard Towing Link shall conform with the dimensions in Figure A1.

5. The strength of the link is the responsibility of the Providing Nation.

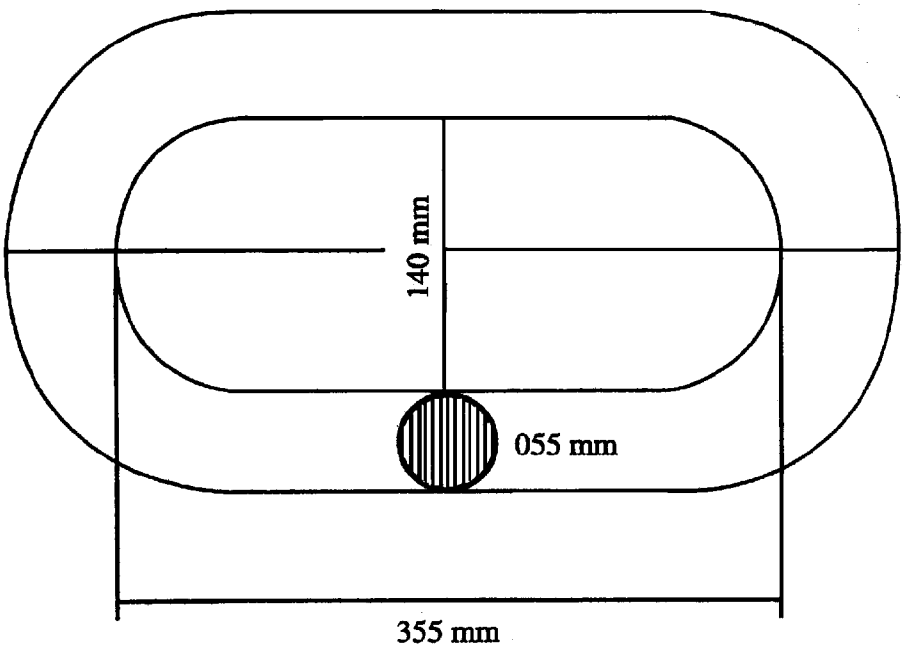

Figure A1. Dimensions of NATO Standard Towing Link

INTENTIONALLY BLANK

ANNEX B

The following graphs show the towing pulls required for a selection of ships to achieve various speeds under tow in calm weather. These curves are for ships 3 months out of dock.

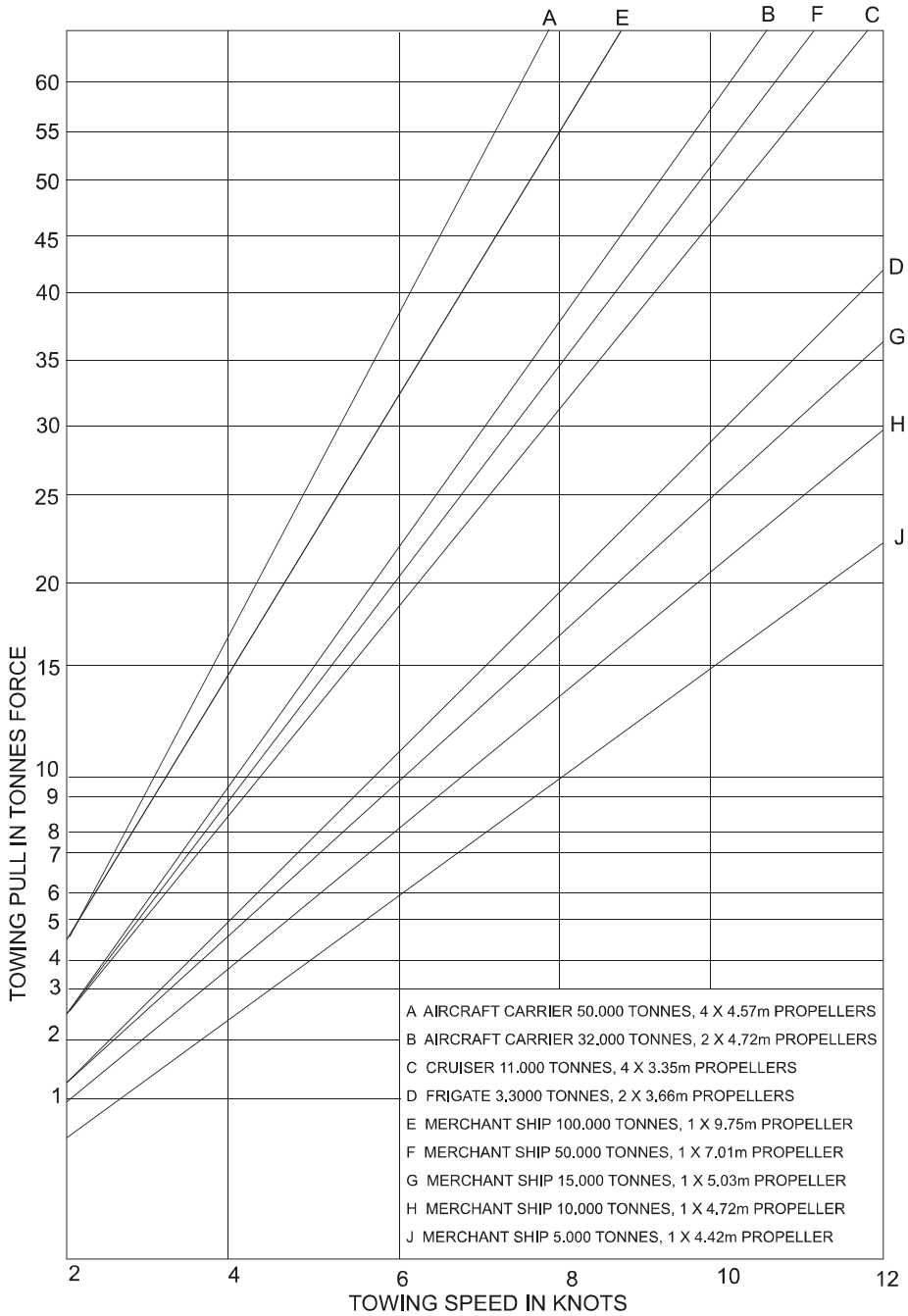

NOTE (1) THESE CURVES ARE FOR CALM WEATHER AND FOR SHIPS 3 MONTHS OUT OF DOCK. TO ALLOW FOR FOULED BOTTOMS, BAD WEATHER OR YAWING, INCREASE THE FACTOR OF SAFETY.

(2) THE TONNAGE SHOWN FOR MERCHANT SHIPS IS THEIR DISPLACEMENT TONNAGE.

Fig B1. Speeds Achieved when Exerting Specific Towing Pulls on Various Categories of Vessel with Propellers Locked

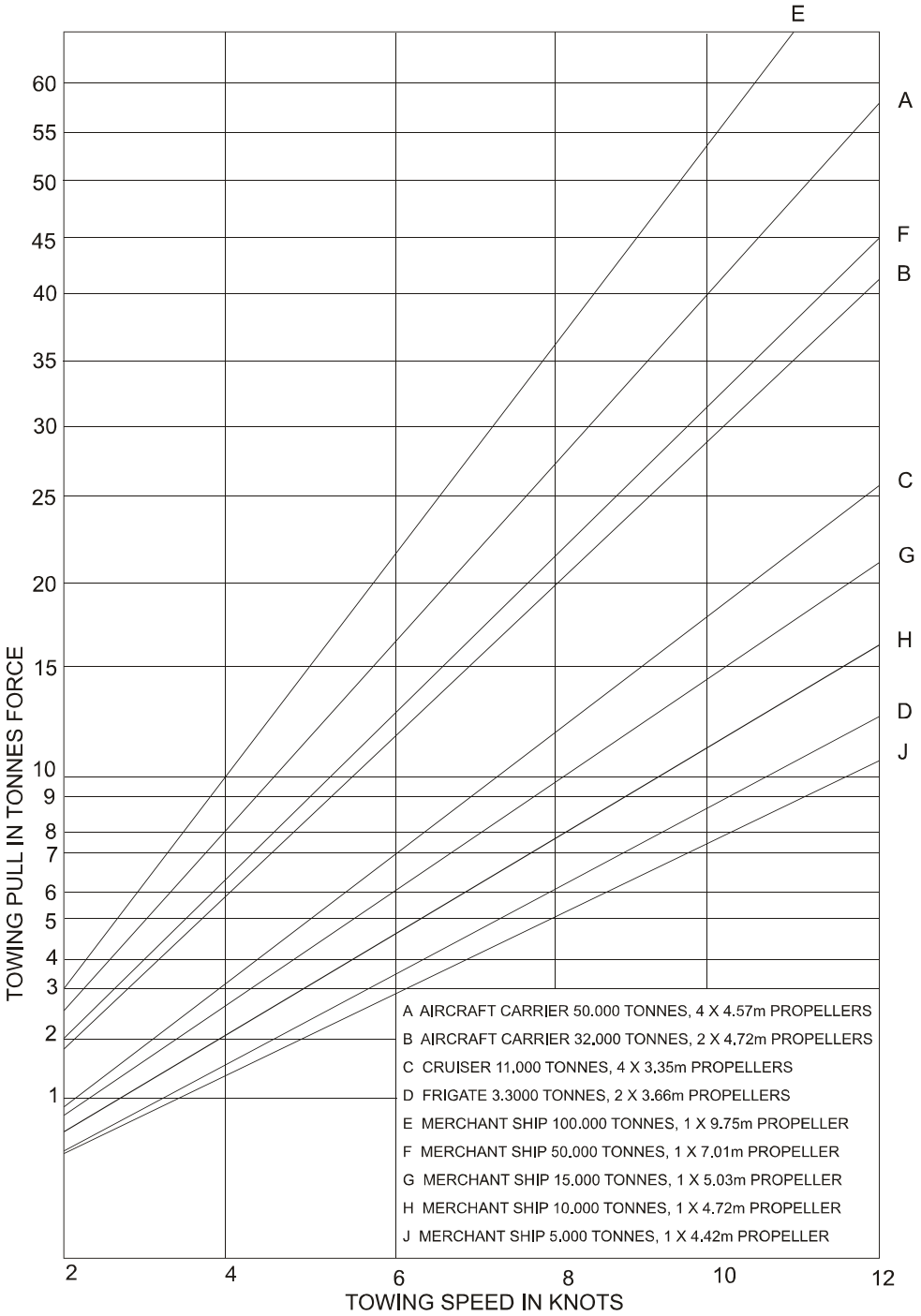

NOTE (1) THESE CURVES ARE FOR CALM WEATHER AND FOR SHIPS 3 MONTHS OUT OF DOCK. TO ALLOW FOR FOULED BOTTOMS, BAD WEATHER OR YAWING, INCREASE THE FACTOR OF SAFETY.

(2) THE TONNAGE SHOWN FOR MERCHANT SHIPS IS THEIR DISPLACEMENT TONNAGE.

Fig B2. Speeds Achieved when Exerting Specific Towing Pulls on Various Categories of Vessel with Propellers <u>Trailing</u>

GLOSSARY OF TERMS AND DEFINITIONS USED IN THIS PUBLICATION

Catenary	The curve formed by the towing rig hanging freely between two points of support.
Chafe	The effect of friction between components of the towing rig and fixed structure or other equipment with which they come in contact.
Chafing Chain	A length of anchor or other chain cable incorporated in the towing rig in order to counter chafe
Clench	See Towing Clench
Hockling	The damaging effect on a synthetic fibre rope caused by the individual strands becoming unlaid when a heavy load on it is suddenly released.
In Irons	Held in a fixed position, unable to turn.
Jury Rig	A temporary arrangement of equipment to replace one lost or damaged.
Stopper (or Preventer)	Any rope, chain or fitting limiting the movement of a rope or chain cable.
Tattle Tale	A length of light cord attached to a synthetic hawser in order to give warning when the load approaches the hawser's limit
TCS	Towing Control Ship, responsible for the conduct of the towing operation; normally the towing ship.
Towing Clench (or Clench Plate)	A strong fitting or pad eye securely attached to the deck or hull structure to which the towing slip or pendant is attached.
Towing Hawser	The main component of the towing rig; constructed of synthetic fibre or wire rope.
Towing Pendant	A length of synthetic fibre or wire rope, or chain cable, connecting the towing hawser to the towing clench or slip.
Towing Slip	The slip or pelican hook fitted to receive the towing hawser or pendant.
Yaw	The action of a ship deviating from course while being towed.

INTENTIONALLY BLANK

LIST OF EFFECTIVE PAGES

Subject	Page	Status
Title Page	I/II	Original
NATO Letter of Promulgation	III/1V	Original
National Letter of Promulgation	V/V1	Original
Record of Reservations	VII/VIII	Original
Record of Changes	IX/X	Original
Contents List	XI/XII	Original
Chapter 1	1-1/1-2	Original
Chapter 2	2-1 to 2-6	Original
Chapter 3	3-1 to 3-20	Original
Annex A	A-1/A-2	Original
Annex B	B-1/B-2	Original
Glossary	Glossary-1/Glossary- 2	Original
LEP	LEP-1/LEP-2	Original

INTENTIONALLY BLANK

ATP-43(B)/MTP-43(B)