USE OF HELICOPTERS IN LAND OPERATIONS

ATP-49(C)
Volume 2

USE OF HELICOPTERS IN LAND OPERATIONS ATP-49(C) Vol 2

ATP-49(C)

USE OF HELICOPTERS IN LAND OPERATIONS

Volume 2

MARCH 2000

(INTENTIONALLY BLANK)

NORTH ATLANTIC TREATY ORGANIZATION

MILITARY AGENCY FOR STANDARDIZATION (MAS)

NATO LETTER OF PROMULGATION

March 2000

1. ATP-49(C) Volume 2 - USE OF HELICOPTERS IN LAND OPERATIONS, is a NATO UNCLASSIFIED publication. The agreement of nations to use this publication is recorded in STANAG 2487.

2. ATP-49(C), Volume 2, is effective upon receipt. It supersedes ATP-49(B) which should be destroyed in accordance with the local procedure for the destruction of documents.

A. GRØNHEIM
Major-General, NOAF
Chairman, MAS

(INTENTIONALLY BLANK)

Chapter	Record of Reservations by Nations
1	
2	
3	
4	
5	
6	
7	
8	
9	
10	
11	
12	
13	
14	
15	
16	

Nation	Reservations

ALLIED TECHNICAL PUBLICATION – 49(C), VOLUME 2

USE OF HELICOPTERS IN LAND OPERATIONS

Allied Tactical Publication – 49(C) (ATP-49(C)) March 2000 Edition,
is promulgated

As directed by the Chiefs of Staff

Director General Joint Doctrine and Concepts Centre

(INTENTIONALLY BLANK)

RECORD OF CHANGES

Change Number and Date	Date Entered	Effective Date	By Whom Entered

(INTENTIONALLY BLANK)

INTRODUCTION

The purpose of ATP 49(C) Volume 2, is to derive the techniques and procedures from the doctrine in Volume I. Volume II develops the detail of the characteristics and roles of helicopters, role and equipment related procedures, marshalling, refuelling, cross-servicing and decontamination of helicopters.

(INTENTIONALLY BLANK)

LIST OF CONTENTS

CHAPTER 1 - PERFORMANCE CHARACTERISTICS OF HELICOPTERS

Aircraft Type	Aircraft Picture	Category Note 2	Pax Note 3	Payload (kg)/Range (km) Note 4						Weapons	Normal Cruise Speed	LP Size Note 5	Fuel Usage Rate	Maximum Usable fuel
				Radius of Action 50 km		Radius of Action 120 km		Internal Payload at Max Range						
				Internal Payload	U'slung Payload	Internal Payload	U'slung Payload	Internal Payload	Max Range		kts		ltrs/hr	ltrs
(a)	(b)	(c)	(d)	(e)	(f)	(g)	(h)	(j)	(k)	(l)	(m)	(n)	(p)	(q)
BELGIUM														
A 109 BA		Armed	0	585	-	475	-	150	360	6 TOW	120	3	275	725
A 109 BA		Recce/ Liaison	6	585	-	475	-	150	360	-	130	3	275	725
ALOUETTE III 316O		Utility	5	400	300	330	300	200	225	-	90	3	200	560
ALOUETTE II 318C		Recce/ Utility	3	400	250	280	250	160	320	-	90	3	140	565
CHEZ REPUBLIC														
Mi-17 Hip														
Mi-24 Hind														
MW-3A Sokol														
CANADA														
CH-146 UTTH Note: Payloads, endurance and range may be reduced by the addition of mission kits weighing from 25 to 400 kg.		Utility	8	1,500	1,500	1,450	1300	900	550	TBD	120	2	425	1,000

Aircraft Type	Aircraft Picture	Category Note 2	Pax Note 3	Payload (kg)/Range (km) Note 4						Weapons	Normal Cruise Speed	LP Size Note 5	Fuel Usage Rate	Maximum Usable fuel
				Radius of Action 50 km		Radius of Action 120 km		Internal Payload at Max Range						
				Internal Payload	U'slung Payload	Internal Payload	U'slung Payload	Internal Payload	Max Range		kts		ltrs/hr	ltrs
(a)	(b)	(c)	(d)	(e)	(f)	(g)	(h)	(j)	(k)	(l)	(m)	(n)	(p)	(q)
DENMARK														
CAYUSE OH-6		Recce	3	360	200	300	200	240	550	-	100	1	100	227
FENNEC AS 550		Armed	-	-	-	-	-	-	-	4 TOW	100	2	175	540
FRANCE														
ALOUETTE II 313		Utility	2	300	350	160	160	80	400	-	5	3	170	565
ALOUETTE II 318		Utility	2	300	400	200	250	130	640	-	90	3	140	565
ALOUETTE III 316		Utility	5	300	650	300	550	360	500	-	100	3	200	560
COUGAR		Transport	18/24	3,200	3,200	2,900	2,900	1,900	750	-	145	3	600	1,980
DAUPHIN		Utility	7	900	0	750	0	200	730	-	145	3	380	1,125
FENNEC AS 55UN		Utility	5	630	630	500	500	50	750	20 mm Cannon (Air Force version)	120	3	230	730
FENNEC AS 355		Armed	-	-	-	-	-	-	-	20 mm Cannon	*	*	*	*
GAZELLE		Armed/	-	-	-	-	-	-	-	20 mm	120	3	170	530

Aircraft Type	Aircraft Picture	Category Note 2	Pax Note 3	Payload (kg)/Range (km) Note 4						Weapons	Normal Cruise Speed	LP Size Note 5	Fuel Usage Rate	Maximum Usable fuel
				Radius of Action 50 km		Radius of Action 120 km		Internal Payload at Max Range						
				Internal Payload	U'slung Payload	Internal Payload	U'slung Payload	Internal Payload	Max Range		kts		ltrs/hr	ltrs
(a)	(b)	(c)	(d)	(e)	(f)	(g)	(h)	(j)	(k)	(l)	(m)	(n)	(p)	(q)
341C		Recce								Cannon				
GAZELLE 342M		Utility	3	400	-	300	-	100	650	-	120	3	180	530
GAZELLE 342 M1		Armed	-	-	-	-	-	-	-	4 HOT day/night	*	*	*	*
GAZELLE 342 ML1		Armed	-	-	-	-	-	-	-	4 HOT or 4 MISTRAL	130	3	180	530
LYNX MK IV		Armed	-	-	-	-	-	-	-	*	120	3	380	950
PANTHER		Armed	-	-	-	-	-	-	-	*	135	3	380	1,125
PUMA 8a		Transport	12/16	2,100	2,100	1,800	1,800	1,250	450	-	130	3	600	1,565
SUPER FRELON		Transport	27	2,100	2,900	1,600	2,450	1,100	480	-	120	3	1,000	3,500
GERMANY														
CH-53 G		Transport	36	6,500	6,500	6,000	6,000	5,500	360	-	120	4	1,200	2,230

Aircraft Type	Aircraft Picture	Category Note 2	Pax Note 3	Payload (kg)/Range (km) Note 4						Weapons	Normal Cruise Speed	LP Size Note 5	Fuel Usage Rate	Maximum Usable fuel
				Radius of Action 50 km		Radius of Action 120 km		Internal Payload at Max Range						
				Internal Payload	U'slung Payload	Internal Payload	U'slung Payload	Internal Payload	Max Range		kts		ltrs/hr	ltrs
(a)	(b)	(c)	(d)	(e)	(f)	(g)	(h)	(j)	(k)	(l)	(m)	(n)	(p)	(q)
UH-1D	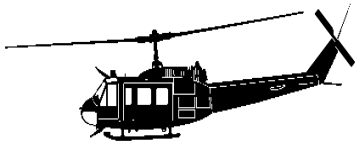	Utility	4-9	1,210	1,210	1,000	1,000	800	350	-	90	3	300	780
BO 105 M		Recce/ Liaison	4	660	-	550	-	350	425	-	110	3	220	550
BO 105 P		Armed	-	-	-	-	-	-	320	6 HOT	100	3	240	500

Aircraft Type	Aircraft Picture	Category Note 2	Pax Note 3	Payload (kg)/Range (km) Note 4						Weapons	Normal Cruise Speed	LP Size Note 5	Fuel Usage Rate	Maximum Usable fuel
				Radius of Action 50 km		Radius of Action 120 km		Internal Payload at Max Range						
				Internal Payload	U'slung Payload	Internal Payload	U'slung Payload	Internal Payload	Max Range		kts		ltrs/hr	ltrs
(a)	(b)	(c)	(d)	(e)	(f)	(g)	(h)	(j)	(k)	(l)	(m)	(n)	(p)	(q)
Mk41		Transport	18	1900	1900	1600	1600	0	840	-	100	4	570	2850
Mk88		Transport	4	750	1360	750	1360	300	500	-	120	3	350	985
Mk88A		Transport	7	750	1360	750	1360	300	700	-	120	3	350	1370

Aircraft Type	Aircraft Picture	Category Note 2	Pax Note 3	Payload (kg)/Range (km) Note 4						Weapons	Normal Cruise Speed	LP Size Note 5	Fuel Usage Rate	Maximum Usable fuel
				Radius of Action 50 km		Radius of Action 120 km		Internal Payload at Max Range						
				Internal Payload	U'slung Payload	Internal Payload	U'slung Payload	Internal Payload	Max Range		kts		ltrs/hr	ltrs
(a)	(b)	(c)	(d)	(e)	(f)	(g)	(h)	(j)	(k)	(l)	(m)	(n)	(p)	(q)
GREECE														
CH-47		Transport	44	12,690	12,690	12,690	12,690	-	-	*	120	3	2,700	5,083
OH-58		Utility	5	499	544	499	544	-	-	*	90	1	95	270
UH-1H		Utility	11	2,041	1,814	2,041	1,814	-	-	*	90	2	362	791
ITALY														
A 109 T/A (EOA 1)		Recce/ Liaison	5	500	-	450	-	200	430	-	125	1	230	703
A 109 T/B (EOA 2)		Armed	-	-	-	-	-	-	-	Rockets 70 mm	125	1	230	530
A 129		Attack	-	-	-	-	-	-	-	8 TOW Rockets 81 mm	125	1	360	900
AB 205		Utility	13	1,599	1,594	1,368	1,341	1,208	340	MG + Rockets	80	2	318	830
AB 206		Recce	2	316	396	238	318	171	326	Minigun 7.62	80	1	110	291
AB 212		Utility	13	1,513	1,482	1,249	1,232	1,091	303	MG + Rockets	80	2	318	768
AB 412		Utility	13	1,600	1,400	1,380	1,183	1,260	360	MG + Rockets	80	2	303	783
CH 47C		Transport	38	9,300	8,700	8,500	7,500	7,500	450	MG 7.62 mm	90	3	1,300	3,960

Aircraft Type	Aircraft Picture	Category Note 2	Pax Note 3	Payload (kg)/Range (km) Note 4						Weapons	Normal Cruise Speed	LP Size Note 5	Fuel Usage Rate	Maximum Usable fuel
				Radius of Action 50 km		Radius of Action 120 km		Internal Payload at Max Range						
				Internal Payload	U'slung Payload	Internal Payload	U'slung Payload	Internal Payload	Max Range		kts		ltrs/hr	ltrs
(a)	(b)	(c)	(d)	(e)	(f)	(g)	(h)	(j)	(k)	(l)	(m)	(n)	(p)	(q)
NETHERLANDS														
ALOUETTE III		Utility	5	*	*	*	*	*	*	-	100	2	200	560
APACHE NAH-64D		Attack								30mm Gun 2.75 FFAR AGM	100	3	478	1900
BO-205CB/CB4		Utility	3	300/300	0/400	300/300	0/300	300/300	0/200	-	120	2	250	568
CHINOOK CH-47D		Transport	30-48	10,500	9,000	*	*	*	*	-	120	3	1,000	3,558
COUGAR AS 532 U2		Transport	16-20	4,500	3,000	4,000	3,000	3,500	3,000	-	130	3	500	1,950
NORWAY														
BELL 412 SP		SAR	11	1000		600		500		-	120	1	400	1,216
PORTUGAL														
ALOUETTE III S316O		Utility	5	400	300	*	*	*	*	12 x 2.75" Rocket or 1 x 20 mm Cannon	90	2	210	550
PUMA SA 330		Transport Support	18	2,400	2,100	*	*	*	*	-	120	3	660	2,250
SPAIN														
B0-105 (HR-15) The SP		Recce	3	660	-	*	*	*	*	20 mm GUN	100	1	210	580

Aircraft Type	Aircraft Picture	Category Note 2	Pax Note 3	Payload (kg)/Range (km) Note 4						Weapons	Normal Cruise Speed	LP Size Note 5	Fuel Usage Rate	Maximum Usable fuel
				Radius of Action 50 km		Radius of Action 120 km		Internal Payload at Max Range						
				Internal Payload	U'slung Payload	Internal Payload	U'slung Payload	Internal Payload	Max Range		kts		ltrs/hr	ltrs
(a)	(b)	(c)	(d)	(e)	(f)	(g)	(h)	(j)	(k)	(l)	(m)	(n)	(p)	(q)
liaison version has the same characteris-tics but no weapons.														
B0-105 (HR-15)		Armed	-	-	-	*	*	*	*	6 HOT	100	1	210	580
CHINOOK H-47D (HT-17)		Transport	33	9,000	9,000	*	*	*	*	-	120	6	1,300	3,885
IROQUOIS UH-1H (HU-10)		Utility	10	1,100	1,800	*	*	*	*	40 mm M94 2.75" M-20D 7.62 mm GUN 12.70 mm GUN	90	2	313	800
IROQUOIS UH-1N (HU-18)		Utility	12	1,500	2,270	*	*	*	*		90	2	340	800
KIOWA CH-58A (HR-12)		Recce	3	432	-	*	*	*	*	7.62 mm MG	90	1	85	240
COUGAR AS532 (HU-21)C		Utility	20	3,000	3,000	*	*	*	*	-	120	3	530	1,460

Aircraft Type	Aircraft Picture	Category Note 2	Pax Note 3	Payload (kg)/Range (km) Note 4						Weapons	Normal Cruise Speed	LP Size Note 5	Fuel Usage Rate	Maximum Usable fuel
				Radius of Action 50 km		Radius of Action 120 km		Internal Payload at Max Range						
				Internal Payload	U'slung Payload	Internal Payload	U'slung Payload	Internal Payload	Max Range		kts		ltrs/hr	ltrs
(a)	(b)	(c)	(d)	(e)	(f)	(g)	(h)	(j)	(k)	(l)	(m)	(n)	(p)	(q)
(HU-21)L		Utility	24	3,000	3,000	-	-	-	-	-	120	3	530	1,460
TURKEY														
AGUSTA BELL AB-204		Utility	8	1,206	*	*	*	*	*	7.62 mm MG-3	80	2	-	-
AGUSTA BELL AB-205		Utility	11	1,542	*	*	*	*	*	7.62 mm MG-3	90	2	318	791
AGUSTA BELL AB-212		Utility	12	1,650	2,270	*	*	*	*	-	130	2	583	1,458
BLACK-HAWK UH-60		Utility	14	3,674	3,629	*	*	*	*	-	145	2	560	1,370
COBRA AH-1P		Attack	-	-	-	-	-	-	-	10 mm GUN 2.75" RP TOW	123	2	318	791
COUGAR AS-532		Utility	18-24	4,500	*	*	*	*	*	-	139	3	600	1,980
IROQUOIS UH-1H		Utility	11	1,542	-*	*	*	*	*	7.62 mm MG-3	90	2	318	791
KIOWA B/C OH-58		Recce	2	408	-	-	-	-	-	7.62 mm MG	90	1	115	344
SUPERCOBRA AH-1W		Attack	-	-	-	-	-	-	-	20 mm GUN 2.75" RP	151	2	525	786

Aircraft Type	Aircraft Picture	Category Note 2	Pax Note 3	Payload (kg)/Range (km) Note 4						Weapons	Normal Cruise Speed	LP Size Note 5	Fuel Usage Rate	Maximum Usable fuel
				Radius of Action 50 km		Radius of Action 120 km		Internal Payload at Max Range						
				Internal Payload	U'slung Payload	Internal Payload	U'slung Payload	Internal Payload	Max Range		kts		ltrs/hr	ltrs
(a)	(b)	(c)	(d)	(e)	(f)	(g)	(h)	(j)	(k)	(l)	(m)	(n)	(p)	(q)
										TOW, Hellfire				
UNITED KINGDOM														
CHINOOK HC Mk2		Transport	30-54	9,200	9,200	8,500	8,000	7,200	400	7.62 mm MG 7.62 mm Minigun	135	5	1539	3718
PUMA HC Mk1		Transport	12-16	2,000	2,000	1,800	1,800	1,300	320	7.62 mm MG	130	3	690	1312

Aircraft Type	Aircraft Picture	Category Note 2	Pax Note 3	Payload (kg)/Range (km) Note 4						Weapons	Normal Cruise Speed	LP Size Note 5	Fuel Usage Rate	Maximum Usable fuel
				Radius of Action 50 km		Radius of Action 120 km		Internal Payload at Max Range						
				Internal Payload	U'slung Payload	Internal Payload	U'slung Payload	Internal Payload	Max Range		kts		ltrs/hr	ltrs
(a)	(b)	(c)	(d)	(e)	(f)	(g)	(h)	(j)	(k)	(l)	(m)	(n)	(p)	(q)
SEA KING Mk4		Transport	20-27	2,720	2,472	2,350	2,350	0	1,016	-	100	5	675	3,750
LYNX AH Mk 7		Utility	9	1,020	940	680	680	450	550	7.62 mm MG	120	1	380	950
LYNX AH Mk 9		Utility	9	1,100	1,100	910	910	700	500	7.62 mm MG	145	1	550	950

Aircraft Type	Aircraft Picture	Category Note 2	Pax Note 3	Payload (kg)/Range (km) Note 4						Weapons	Normal Cruise Speed	LP Size Note 5	Fuel Usage Rate	Maximum Usable fuel
				Radius of Action 50 km		Radius of Action 120 km		Internal Payload at Max Range						
				Internal Payload	U'slung Payload	Internal Payload	U'slung Payload	Internal Payload	Max Range		kts		ltrs/hr	ltrs
(a)	(b)	(c)	(d)	(e)	(f)	(g)	(h)	(j)	(k)	(l)	(m)	(n)	(p)	(q)
GAZELLE AH 1		Recce	-	280	215	200	135	200	510	-	130	1	190	440
GAZELLE AH 1		Liaison	1-3	305	240	225	160	225	530	-	130	1	190	440
UNITED STATES														
OH-6 CAYUSE		Recce	3	454	-	*	*	*	*	-	90	1	83	231

Aircraft Type	Aircraft Picture	Category Note 2	Pax Note 3	Payload (kg)/Range (km) Note 4						Weapons	Normal Cruise Speed	LP Size Note 5	Fuel Usage Rate	Maximum Usable fuel
				Radius of Action 50 km		Radius of Action 120 km		Internal Payload at Max Range						
				Internal Payload	U'slung Payload	Internal Payload	U'slung Payload	Internal Payload	Max Range		kts		ltrs/hr	ltrs
(a)	(b)	(c)	(d)	(e)	(f)	(g)	(h)	(j)	(k)	(l)	(m)	(n)	(p)	(q)
OH-58C KIOWA		Recce	3	408	-	*	*	*	*	-	90	1	102	270
OH-58D KIOWA		Recce	-	-	-	*	*	*	*	.50" MG 70 mm RP HELLFIRE STINGER	90	1	155	424
UH-1H IROQUOIS		Utility	11	1,542	1,542	*	*	*	*	7.62 mm MG	90	2	318	791

Aircraft Type	Aircraft Picture	Category Note 2	Pax Note 3	Payload (kg)/Range (km) Note 4						Weapons	Normal Cruise Speed	LP Size Note 5	Fuel Usage Rate	Maximum Usable fuel
				Radius of Action 50 km		Radius of Action 120 km		Internal Payload at Max Range						
				Internal Payload	U'slung Payload	Internal Payload	U'slung Payload	Internal Payload	Max Range		kts		ltrs/hr	ltrs
(a)	(b)	(c)	(d)	(e)	(f)	(g)	(h)	(j)	(k)	(l)	(m)	(n)	(p)	(q)
UH-60 BLACKHAWK		Utility	14	3,674	3,629	*	*	*	*	7.62 mm MG	120	2	560	1370
CH-47C CHINOOK		Transport	33	10,206	9,072	*	*	*	*	7.62 mm MG	120	3	1,769	4,321
CH-47D CHINOOK		Transport	33	10,886	9,072	*	*	*	*	7.62 mm MG	120	3	1,515	3,916

Aircraft Type	Aircraft Picture	Category Note 2	Pax Note 3	Payload (kg)/Range (km) Note 4						Weapons	Normal Cruise Speed	LP Size Note 5	Fuel Usage Rate	Maximum Usable fuel
				Radius of Action 50 km		Radius of Action 120 km		Internal Payload at Max Range						
				Internal Payload	U'slung Payload	Internal Payload	U'slung Payload	Internal Payload	Max Range		kts		ltrs/hr	ltrs
(a)	(b)	(c)	(d)	(e)	(f)	(g)	(h)	(j)	(k)	(l)	(m)	(n)	(p)	(q)
AH-1F COBRA		Attack	-	1,088	-	*	-	*	-	20 mm Gun 2.75" RP TOW	120	2	370	985
AH-64 APACHE		Attack	-	-	2,700	-	*	-	*	30 mm Cannon 70 mm RP HELLFIRE	140	2	478	1,400
AH-1T SEA COBRA		Attack	-	1,365	1,365	*	*	*	*	2.75" FFAR 5" ZUNI 20 mm, TOW SIDEWINDER SIDEARM	140	2	466	1,223

Aircraft Type	Aircraft Picture	Category Note 2	Pax Note 3	Payload (kg)/Range (km) Note 4						Weapons	Normal Cruise Speed	LP Size Note 5	Fuel Usage Rate	Maximum Usable fuel
				Radius of Action 50 km		Radius of Action 120 km		Internal Payload at Max Range						
				Internal Payload	U'slung Payload	Internal Payload	U'slung Payload	Internal Payload	Max Range		kts		ltrs/hr	ltrs
(a)	(b)	(c)	(d)	(e)	(f)	(g)	(h)	(j)	(k)	(l)	(m)	(n)	(p)	(q)
AH-1W SUPER SEA COBRA		Attack	-	1,814	1,814	*	*	*	*	2.75" FFAR 5" ZUNI 20 mm, TOW HELLFIRE SIDEWINDER SIDEARM	140	2	525	1,165
UN-1N HUEY		Utility	8 Note 6	907	907	*	*	*	*	2 x .50Cal M-60 MG 2.75FFAR GAU 17	110	2	350	786
CH-46E SEA KNIGHT		Transport	15 Note 6	2,268	2,268	*	*	*	*	2 x .50Cal (2.7mm)	120	3	700	1,398

Aircraft Type	Aircraft Picture	Category Note 2	Pax Note 3	Payload (kg)/Range (km) Note 4						Weapons	Normal Cruise Speed	LP Size Note 5	Fuel Usage Rate	Maximum Usable fuel
				Radius of Action 50 km		Radius of Action 120 km		Internal Payload at Max Range						
				Internal Payload	U'slung Payload	Internal Payload	U'slung Payload	Internal Payload	Max Range		kts		ltrs/hr	ltrs
(a)	(b)	(c)	(d)	(e)	(f)	(g)	(h)	(j)	(k)	(l)	(m)	(n)	(p)	(q)
CH-53A SEA STALLION		Transport	30 Note 6	6,305	6,305	*	*	*	*	2 x .50Cal (2.7mm)	130	4	1,050	2,414
CH-53 D SEA STALLION		Transport	30 Note 6	5,715	5,725	*	*	*	*	2 x .50Cal (12.7mm)	130	4	1,165	6,987

Aircraft Type	Aircraft Picture	Category Note 2	Pax Note 3	Payload (kg)/Range (km) Note 4						Weapons	Normal Cruise Speed	LP Size Note 5	Fuel Usage Rate	Maximum Usable fuel
				Radius of Action 50 km		Radius of Action 120 km		Internal Payload at Max Range						
				Internal Payload	U'slung Payload	Internal Payload	U'slung Payload	Internal Payload	Max Range		kts		ltrs/hr	ltrs
(a)	(b)	(c)	(d)	(e)	(f)	(g)	(h)	(j)	(k)	(l)	(m)	(n)	(p)	(q)
CH-53E SUPER SEA STALLION		Transport	30 Note 6	12,474	12,474	*	*	*	*	2 x .50Cal (12.7mm)	130	4	1,805	9,051

NOTES:

(1) Units of measurement - kilograms (kg), kilometres (km), nautical miles per hour (kts), litres (ltrs).
(2) Aircraft Category - see Glossary.
(3) Number of passengers depends on aircraft configuration.
(4) Internal Fuel Tanks, Sea Level ISA conditions (USL configuration may influence radius of action).
(5) LP size - see Chapter 4.
(6) Combat loaded troops.

(INTENTIONALLY BLANK)

CHAPTER 2 - NAVIGATION AIDS AND ACCURACIES

0201. **Aim.** The aim of this chapter is to standardise the minimum navigation and communication capabilities necessary for helicopters in multinational land operations and achieve compatible systems to navigate accurately over long distances under operational conditions at any time of day and in adverse weather.

0202. **Introduction.** There is an essential requirement that data on the compatibility of equipment and procedures are readily available to member nations for effective employment of helicopters during operations. It is recognised that member nations have in use a wide variety of helicopters and equipment. Responsibilities should be co-ordinated to ensure the availability of resources, frequencies and codes to enable supporting and supported units to utilise the required radio and navigation aids. To achieve this, effective liaison between the supported unit, co-ordinating agencies and the supporting aviation units must be established and maintained throughout operations.

0203. **Navigation and Radio Aids.** The use and employment of navigation aids must be based on the operational factors affecting the mission, the threat of detection and engagement by threat weapons, Electronic Counter-measures (ECM) an/or Electronic Warfare (EW) measures. Ground based facilities (transmitters, beacons or radio aids located on the ground near or at the point of navigation), which emit signals and bearing information to equipment on the receiving aircraft, should be offset from the landing site to avoid threat Direction Finding (DF) and detection equipment.

0204. **Navigation Aid Accuracies and Visual Aid Capabilities:**

a. **Global Positioning System.** The specific Global Positioning System (GPS) accuracy requirements are stated in STANAG 4278 - Method of Expressing Navigation Accuracy. Desired minimum accuracy is 100 metres, 95% horizontal; i.e. Standard Positioning Service (SPS) without encryption codes.

b. **Autonomous Navigation Devices.** Autonomous navigational devices such as Doppler and/or Inertial Navigation Systems (INS) etc. should, if possible, be linked and regularly updated from a GPS-based navigation aid. They must be able to maintain track, with a maximum of 5% across-track and along-track error, without reference to GPS.

c. **Night Vision Devices Capabilities.** Night Vision Devices (NVD) and equipment, used by aviation assets for night operations, must facilitate the use of tactical flight profiles for night missions to include the use of terrain masking techniques, tactical approach and departures and evasive / defensive manoeuvres.

0205. **Responsibilities of the Supported Unit.** Where the requirement exists, the supported unit will provide the following:

a. **Ground Based Tactical Electronic Navigation Aids.** If ground based electronic navigation and approach aids are required, the supported unit will liaise with the helicopter unit about their location and use.

b. **Visual Navigation Aids.** At night or in poor weather conditions or for tactical reasons, navigation may be assisted by the display of colour-coded lights or ground panels at pre-determined grid references on the route.

c. **Intelligence.** An up-to-date intelligence brief to include, where possible, positions of friendly and enemy troops.

d. **Locations.** The grid reference of landing points with desired routes and reporting points.

e. **Landing Sites.** Landing sites prepared, marked and identified in accordance with Chapter 4.

f. **Landing Zone Control Party.**

g. **Airspace Advisory.** The supported unit will be responsible for airspace advisories within the unit's area of responsibility.

h. **Approach and Departure Routings.** Identification of approach and departure routings as required by the unit's location and the operational situation.

0206. **Responsibilities of the Helicopter Unit.** The helicopter unit will be responsible for:

a. Under all conditions:

(1) Providing its own maps.

(2) Being briefed on the meteorological situation.

(3) Being aware of, and complying with, any necessary air defence and air traffic procedures in force.

(4) Flying the sorties as briefed and carrying out identification procedures as required.

b. The following are highly desirable by night or in weather conditions of limited ceiling and visibility:

(1) Navigator crewman or second pilot.

(2) Pilot interpreted avionics navigation aids.

(3) Pilot interpreted night vision devices.

c. Initiating and maintaining liaison with the supported unit to determine navigation requirements and inter-operability with the supported unit's equipment.

d. Determining navigation (aids and equipment) requirements given the forecasted weather, tactical situation, terrain and time of the operation/ mission.

e. Liaising with the airspace co-ordinating/controlling agency to identify the requirement or need to establish flight routings and/or corridors.

f. Determining restrictions/hazards to flight.

g. Air defence policy.

h. Disposition of forces with respect to flight routings and the area of operations.

i. Communications security and procedures.

j. Co-ordination with other units in the mission/operations area.

k. Obtaining the frequencies and codes for onboard aircraft navigation systems (e.g. GPS) from the appropriate controlling agency.

0207. Ground based facilities/navigation aids and/or aircraft navigation systems which are susceptible to engagement by threat weapons or EW/ECM should be used with due consideration for the tactical situation, terrain, navigation requirements, weather and the level of threat.

0208. Details of national navigation and communication equipment in helicopters are shown in Annex A (formerly STANAG 2863 HIS).

NAVIGATION AND COMMUNICATIONS EQUIPMENT

GROUND/AIRCRAFT RADIOS/RADIOS SOL/AIR

NATION: BELGIUM/BELGIQUE

TYPE	VHF FM COMMUNICATIONS (MHz) TRANSMISSIONS VHF/FM (MHz)			VHF FM COMMUNICATIONS (MHz) TRANSMISSIONS VHF/FM (MHz)		VHF FM COMMUNICATIONS (MHz) TRANSMISSIONS VHF/FM (MHz)	
	FREQUENCY/ FREQUENCES (10-100 MHz)	Channel Spacing / Pas des Canaux	Type Squelch/ de silencieux	FRFQUENCY/ FREQUENCES (100-170 MHz)	Channel Spacing / Pas des Canaux	FREQUENCY/ FREQUENCES (200-400 MHz)	Channel Spacing /Pas des Canaux
GROUND/SOL	20-54.9	100		100-156	25	225-400	
A 109 BA	30-87.975 (1)	25		108-151.975 (2)	25	225-399.975 (2)	25
ALOUETTE 11	24-51.9	100		116-151.975	50		
ALOUETTE III	24-51.9	100		116-151.975	50	225-400	50
SEA KING				116-151.975	25	225-400	50

NOTES:
(I) VLIF/FM AND VHF/AM CAN NOT BE OPERATED AT THE SAME TIME
(2) EQUIPPED WITH HQ II

NAVIGATIONAL AIDS/AIDE A LA NAVIGATION

NATION: BELGIUM/BELGIQUE

TYPE	HF (MHz)	HOMER/Balise de Ralliement	NAVIGATIONAL AIDS/ HF/Aides de la navigation/ Canaux (KHz)	IFF/SSR Transponder	CHANNEL SPACING /Pas des Canaux (KHz) HF
GROUND/SOL	2-12		NDB/ Omnidirectional Radio Beacon Radiobalise omnidirectionelle 200-100 (KHz)		500 Hz
A 109 BA			100-2199.5MHz, RADAR ALTIMETER: DOPPLER: GPS	1,2,3,C	100
ALOUETTE II			ADF 200-1799 KHz	I,2,3,C	
ALOUETTE		UHF			
SEA KING	2-30	121.5 & 243 (MHz)	ADF 200-1799+2182 (KHz); VOR/ILS/MB 75 (MHz) ; TACAN	I ,2,3,C	

GROUND/AIRCRAFT RADIOS/RADIOS SOL/AIR

NATION: CANADA

TYPE	VHF FM COMMUNICATIONS (MHz) TRANSMISSIONS VHF/FM (MHz)			VHF FM COMMUNICATIONS (MHz) TRANSMISSIONS VHF/FM (MHz)		VHF FM COMMUNICATIONS (MHz) TRANSMISSIONS VHF/FM (MHz)	
	FREQUENCY/ FREQUENCES (10-100 MHz)	Channel Spacing / Pas des Canaux	Type Squelch/ de silencieux	FRFQUENCY/ FREQUENCES (100-170 MHz)	Channel Spacing / Pas des Canaux	FREQUENCY/ FREQUENCES (200-400 MHz)	Channel Spacing /Pas des Canaux
GROUND/SOL							
CII-146 UTTH	30.00-87.975	25 KHz		108-117.975 118-115.975 136-155.975 156-173.975	25 KHz 25 KHz 25 KHz	225-399.975	25 KHz
CII 124 SEA KING				116-151.975 150-173.9975	25 KHz 25 KHz	225-399.975	25KHz

NOTE: Homing available on all CH-146 VHF and UHF AM/FM radios

NAVIGATIONAL AIDS/AIDE A LA NAVIGATION

NATION: CANADA

TYPE	HF (MHz)	HOMER/Balise de Ralliement	NAVIGATIONAL AIDS/ HF/Aides de la navigation/ Canaux (KHz)	IFF/SSR Transponder	CHANNEL SPACING /Pas des Canaux (KHz) HF
CH-146 UTTH	2-29.999	NOTE 1	ADF 100-2199.5; VOR/ILS 108-117.95 KHz; GPS 1227.6 and 1575.42; DOPPLER; DME	I ,2,3,4,C	HF - 100 Hz
CH-124 SEA KING	2-29.999		DOPPLER TACAN, IFF	1,2,3,4,C	100 Hz

NOTE 1: Horning available on all CH-146 VHF and UHF AM/FM Radios

GROUND/AIRCRAFT RADIOS/RADIOS SOL/AIR

NATION: DENMARK

TYPE	VHF FM COMMUNICATIONS (MHz) TRANSMISSIONS VHF/FM (MHz)			VHF FM COMMUNICATIONS (MHz) TRANSMISSIONS VHF/FM (MHz)		VHF FM COMMUNICATIONS (MHz) TRANSMISSIONS VHF/FM (MHz)	
	FREQUENCY/ FREQUENCES (10-100 MHz)	Channel Spacing / Pas des Canaux	Type Squelch/ de silencieux	FRFQUENCY/ FREQUENCES (100-170 MHz)	Channel Spacing / Pas des Canaux	FREQUENCY/ FREQUENCES (200-400 MHz)	Channel Spacing /Pas des Canaux
ARMY							
GROUND/SOL	26-79.975	25	Noise/Tone	116-149.975	25	225-399.975 (1)	25
FENNEC	30-87.975	25	Noise/Tone	116-151.975	25	225-399.975 (1)	25
HUGHES	26-79.975	25	Noise/Tone	118-136.975	25	225-399.975	25
AIR FORCE							
SEA KING	30-87.975	25	Noise	118-136.975	25	225-399.975	25
NAVY							
LYNX	30-87.975	25	Noise	118-136.975	25	225-399.975	25

NOTE (1) HAVE QUICK, Type 2

NAVIGATIONAL AIDS/AIDE A LA NAVIGATION

NATION: DENMARK

TYPE	HF (MHz)	HOMER/Balise de Ralliement	NAVIGATIONAL AIDS/ HF/Aides de la navigation/ Canaux (KHz)	IFF/SSR Transponder	CHANNEL SPACING /Pas des Canaux (KHz) HF
ARMY					
GROUND/SOL	2-29.999				
FENNEC	2-29.999 (100 Hz spec)	30-87.975 (VHF/FM)	GGPS P/Y; DOPPLFR; VOR/ILS 108-117.95 MHz: ADF; DME; RADIO ALTIMETER	I ,2,3,4,C	
HUGHES			GPS P/Y	1,2,3,C	
SEA KING	~-29.999 (100 Hz spec)	UHF/VHF (AM) + Direction finder (100-400 MHz)	GPS C/A; DECCA; DOPPLER; VOR/ILS/DMF; ADF RADIO ALTIMETER, SEARCH RADAR	1,2,3,C	
NAVY					
LYNX	~-29.999 (100 Hz spec)	UHF/VHF (AM)	GPS C/A; DOPPLER; VOR/ILS DME; ADF; SEARCH RADAR	1,2,3,4,C	

GROUND/AIRCRAFT RADIOS/RADIOS SOL/AIR

NATION: FRANCE

TYPE	VHF FM COMMUNICATIONS (MHz) TRANSMISSIONS VHF/FM (MHz)			VHF FM COMMUNICATIONS (MHz) TRANSMISSIONS VHF/FM (MHz)		VHF FM COMMUNICATIONS (MHz) TRANSMISSIONS VHF/FM (MHz)	
	FREQUENCY/ FREQUENCES (10-100 MHz)	Channel Spacing / Pas des Canaux	Type Squelch/ de silencieux	FRFQUENCY/ FREQUENCES (100-170 MHz)	Channel Spacing / Pas des Canaux	FREQUENCY/ FREQUENCES (200-400 MHz)	Channel Spacing /Pas des Canaux
GROUND/SOL	30-8795 (I)(2)	50		118-143.975	25	225-400	25
ALOUETTE II	24-51.95	100		118-143.975	25		
ALOUETTE III	26-71.95	50		118-143.975	25		
GAZELLE	26-71.95 (4)	50		118-143.975 (5)	25	225-400 (5)	25
ECUREUIL	26-71.95 (4)	50		118-143.975 (5)	25	225-400 (5)	25
SUPER-FRELON	26-71.95 (2)	50		118-143.975	25	225-400 (2)	25
PUMA	26-71.95 (4)	50		118-143.975 (5)	25	225-400 (5)	25
COUGAR	30-87.95 (3)	50		118-143.975 (5)	25	225-400 (5)	25
DAUPHIN				118-156.875	25	225-400	25
PANTHER				118-156.875	25	225-400	25
LYNX	26-71.95	50		118-156.875	25	225-400(2)	25

NOTES:

(1) Frequency agile.
(2) Secure Communications Capability
(3) Secure and agility capabilities within 2/3 years
(4) Will be changed within 2/3 years to 30-87.95MHz with secure and agility capabilities
(5) Will be changed to 108-173.975 and 225-399.750 MHz with secure and agility capabilities (HAVE-QUICK I&2 /SATURN)

NAVIGATIONAL AIDS/AIDE A LA NAVIGATION

NATION: FRANCE

TYPE	HF (MHz)	HOMER/Balise de Ralliement	NAVIGATIONAL AIDS/ HF/Aides de la navigation/ Canaux (KHz)	IFF/SSR Transponder	CHANNEL SPACING /Pas des Canaux (KHz) HF
GROUND/SOL	2-12				
ALOUETTE II		VHF FM	ADF 200-800 KHz		
ALOUETTE III		VHF FM	ADF 200-800 KHz		
COUGAR		UHF	ADFF200-800-KHz; VOR/ILS 108-117.9MHz; RADIO ALTIMETER;GPS (Air Force only) DME; TACAN; MARKER; DOPPLER; **METEOROLOGICAL RADAR**	1,2,3A,3C,4	
DAUPHIN			VOR/ILS 108-177.9 MHz; RADIO ALTIMETER; **TACAN; DOPPLER-RADAR**	I 2,3 A	
FENNEC		UHF	ADF 190-1749.5 KHz ; VOR/ILS; Marker Beacon 75 MHz-; TACAN; RADIO ALTIMETER; Navigation Computer	I ,2,3A,3C,4	
GAZELLE SA34I			ADF 199-1749.5KHz; GPS P/Y; RADIO ALTIMETER	1,2,3A,4	
GAZELLE SA342			ADF199-1749.5 KHz; NADIR DOPPLER; RADIO ALTIMETER	1 ,2,3A,4	
LYNX		UHF	GPS C/A; RADAR; RADIO ALTIMETER; DOPPLER	I ,2,3A,4	
PANTHER		UHF	ADF 200-800 KHz; VOR/ILS 108-117.9 MHz; RADIO ALTIMETER; TACAN; DOPPLER	1,2,3A	
PUMA ARMY	2-20	UHF	ADF 200-800KHz; VOR 108-117.9 MHz; ILS; MARKER; DME/NADIR-DOPPLER Radio Altimeter	I ,2,3A,3C~4	
PUMA AIR FORCE	2-20	VHF FM UHF	ADF 190-1749.5 KHz- VOR/ILS Marker Beacon 75 MHz - TACAN Radio Altimeter	1 ,2,3A,3C,4	
SUPER FRELON		UHF	ADE 200-800 KHz, VOR 108-117.9 MHz ILS TACAN-DOPPLER-GPS-RADIO ALTIMETER; METEOROLOGICAL RADAR	I 2,3A,3C,4	

GROUND/AIRCRAFT RADIOS/RADIOS SOL/AIR

NATION: GERMANY

TYPE	VHF FM COMMUNICATIONS (MHz) TRANSMISSIONS VHF/FM (MHz)			VHF FM COMMUNICATIONS (MHz) TRANSMISSIONS VHF/FM (MHz)		VHF FM COMMUNICATIONS (MHz) TRANSMISSIONS VHF/FM (MHz)	
	FREQUENCY/ FREQUENCES (10-100 MHz)	Channel Spacing / Pas des Canaux	Type Squelch/ de silencieux	FRFQUENCY/ FREQUENCES (100-170 MHz)	Channel Spacing / Pas des Canaux	FREQUENCY/ FREQUENCES (200-400 MHz)	Channel Spacing /Pas des Canaux
GROUND/SOL	30-69.95	50	T	118-144.975	25	225-399.975	25
CH-53(3	30-75.95	50	T	116-149.975	25	225-399.975	25
UH-ID	30-75.95	50	T	116-149.975	25	225-399.975	25
ALOUETTE II	30-75.95	50	T	118-135.975	25	225-399.975	25
BO 105 M	30-75.95	50	T	118-135.975	25	225-399.975	25
HO 105 P	30-75.95	50	T	--	--	225-399.975	25
Mk 41	75.275-77.665	20		116.000-149.975 146-174	25	225-399.975	25
Mk 88	30-87.975	25		108-399.975	25	225-399.975	25
Mk 88A	30-87.975	25		108-399.975	25	225-399.975	25

NAVIGATIONAL AIDS/AIDE A LA NAVIGATION

NATION: GERMANY

TYPE	HF (MHz)	HOMER/Balise de Ralliement	NAVIGATIONAL AIDS/ HF/Aides de la navigation/ Canaux (KHz)	IFF/SSR Transponder	CHANNEL SPACING /Pas des Canaux (KHz) HF
GROUND/SOL					
CH-53G		VHF FM 30-75.95 MHz	ADF 190-1799.5 KHz; .LOC 108-111.9MHz; VOR 111.9-117.9 MHz: GS 329.3-335 MHz; TACAN 962-1.213 GHz; RADIO ALTIMETER; Marker Beacon; Radio Balise 75MHz	1,2,3A/C4	VOR - 50 KHz GS - 300KHz TACAN - 1 MHz
UH1D		VHF FM 30-75.95 MHz; UHF AM 225-399.95 MHz	ADF 190-1799.5 KHz; LOC 108-111.9 MHz; VOR 111.9-117.9 MHz; GS 329.3-335 MHz; RADIO ALTIMETER; Marker Beacon/RadioBalise 75 MHz	1,2,3A/C,4	VOR - 50KHz GS - 300 KHz
BO 105 M		VHF FM 30-75.95 MHz	LDNS (DOPPLER)	1,2,3A/C,4	50 KHz
BO 105 P		VHF FM 30-75.95 MHz	LDNS (DOPPLER)	I ,2,3AIC,4	50 KHz
Mk41	2-29.999/1KHz	VHF 121.5 + 123.1 MHz UHF 243.0 + 243.5 + 245.1 MHz	ADF 190-1799.5 KHz, TACAN 962-1213 MHz, LOC 108.1-111.9 MHz, GS 329.3-335.0 MHz, VOR 108.0-118.0, Radio Altimeter, Marker Beacon 75 MHz	1,2,3/A C 4	ILS - 200 KHz VOR - 50 KHz GS - 300 KHz TACAN - 1 MHz
Mk 88	2-29.999/1KHz	108-399.975 MHz	ADF 190-1799.5 KHz, Radar Altimeter, TACAN 962-1213 MHz	1,2,3/A C 4	TACAN - 1 MHz
Mk 88A	2-29.999/1KHz	108-399.975 MHz	ADF 190-1799.5 KHz, Radar Altimeter, TACAN 962-1213 MHz	1,2,3/A C 4	TACAN - 1 MHz

GROUND/AIRCRAFT RADIOS/RADIOS SOL/AIR

NATION: GREECE

TYPE	VHF FM COMMUNICATIONS (MHz) TRANSMISSIONS VHF/FM (MHz)			VHF FM COMMUNICATIONS (MHz) TRANSMISSIONS VHF/FM (MHz)		VHF FM COMMUNICATIONS (MHz) TRANSMISSIONS VHF/FM (MHz)	
	FREQUENCY/ FREQUENCES (10-100 MHz)	Channel Spacing / Pas des Canaux	Type Squelch/ de silencieux	FRFQUENCY/ FREQUENCES (100-170 MHz)	Channel Spacing / Pas des Canaux	FREQUENCY/ FREQUENCES (200-400 MHz)	Channel Spacing /Pas des Canaux
GROUND/SOL	30-75.95	50		116-149.975	25	225-339	50
UH-INH/N	26/30-75.95	50		116-149.975	25	225-400	50
AB-205	26/30-75.95	50		116-149.975	25	225-400	50
CH-47C	26/30-75.95	50		116-149.975	25	225-400	50
AB-206B	26-75.95	50		116-149.975	25	225-400	50

NAVIGATIONAL AIDS/AIDE A LA NAVIGATION

NATION: GREECE

TYPE	HF (MHz)	HOMER/Balise de Ralliement	NAVIGATIONAL AIDS/ HF/Aides de la navigation/ Canaux (KHz)	IFF/SSR Transponder	CHANNEL SPACING /Pas des Canaux (KHz) HF
GROUND	2.0-30				
UH-I H/N		VHF/FM	ADF 190-1750 KHz; VOR 108-112MHz	UNKNOWN	
AB-205		VHF/FM	ADF 190-1750 KHz; VOR 108-112MHz	UNKNOWN	
CH-47C		VHF/FM	ADF 190-1750 KHz; VORIILS 108-112 MHz	UNKNOWN	
AB-206 B		VLIF/FM	ADF 190-1750 KHz	UNKNOWN	
HSS-t		VHF/FM	A()F 190-1750 KHz	UNKNOWN	

GROUND/AIRCRAFT RADIOS/RADIOS SOL/AIR

NATION: ITALY

TYPE	VHF FM COMMUNICATIONS (MHz) TRANSMISSIONS VHF/FM (MHz)			VHF FM COMMUNICATIONS (MHz) TRANSMISSIONS VHF/FM (MHz)		VHF FM COMMUNICATIONS (MHz) TRANSMISSIONS VHF/FM (MHz)	
	FREQUENCY/ FREQUENCES (10-100 MHz)	Channel Spacing / Pas des Canaux	Type Squelch/ de silencieux	FRFQUENCY/ FREQUENCES (100-170 MHz)	Channel Spacing / Pas des Canaux	FREQUENCY/ FREQUENCES (200-400 MHz)	Channel Spacing /Pas des Canaux
GROUND/SOL	26-72	50		116-156	25	225-400	25
AB206	30-76	50		116-156		225-400	50
A IO9T	30-88	25		116-156	25	225-400	25
A 129	30-88	25		116-156	25	225-400	25
AB 205	30-88	25 (1)/SO		116-156	25(1)/SO	225-400	50
AB212	30-88	25		116-156	25	225-400	25
AB412	30-88	25		116-156	25	225-400	25
CII-47C	30-88	25		116-156	25	225-400	25 (2)/SO

NOTES:

(1) AB 2O5 UN
(2) CH47C Code C.

NAVIGATIONAL AIDS/AIDES A LA NAVIGATION

NATION: ITALY

TYPE	HF (MHz)	HOMER/Balise de Ralliement	NAVIGATIONAL AIDS/ HF/Aides de la navigation/ Canaux (KHz)	IFF/SSR Transponder	CHANNEL SPACING /Pas des Canaux (KHz) HF
GROUND/SOL					
AB 206		VHF FM	ADF 190-1750 KHz	1,2,3A,4C	I KHz
A 109 T	2-30	VHF AM; UHF FM	DF 190-l75O KHz; VORIILS 108-118MHz Marker Beacon; Radar Altimeter; Doppler; DME	I,2,3A,4C	I KHz
A 129	2-30	VHF (AM), (FM) UHF (AM), (FM)	ADF 190-1750KHz. Doppler; Marker Beacon Air Data System; Radar Altimeter; Inertial Platform	I,2,3A,4C	I KHz

AB 205	2-30	VHF AM; UHF FM	ADF 190-l75OKHz; VOR 108-118MHz; DOPPLER; DME	l,2,3A,4C	1 KHz
AH 212	2-30	VHF (AM), (FM) UHF (AM)	ADF 190-1750KHz; VOR/ILS 108-118 MHz Marker Beacon; Radar Altimeter; Doppler; DME	I ,2,3A,4C	1 KHz
AH 412	2-30	VHF (AM), (FM) UHF (AM)	ADF 190-1750 KHz; VOR/ILS I 08118 MHz; LOC/GS; Marker Beacon; Radar Altimeter; Doppler; DME	I ,2,3A,4C	I KHz
CH-47C	2-30	VHF (AM) (FM) UHF (AM)	ADF 190-1750KHz; VOR/ILS 108-118 MHz; LOC/GS; Marker Beacon; Radar Altimeter; DOPPLER; DME; per ch47 cod C e B transformato in D	l,2,3A,4C	I KHz

NOTE:

(1) Su 205 ONU

GROUND/AIRCRAFT RADIOS/RADIOS SOL/AIR

NATION: NETHERLANDS

TYPE	VHF FM COMMUNICATIONS (MHz) TRANSMISSIONS VHF/FM (MHz)			VHF FM COMMUNICATIONS (MHz) TRANSMISSIONS VHF/FM (MHz)		VHF FM COMMUNICATIONS (MHz) TRANSMISSIONS VHF/FM (MHz)	
	FREQUENCY/ FREQUENCES (10-100 MHz)	Channel Spacing / Pas des Canaux	Type Squelch/ de silencieux	FRFQUENCY/ FREQUENCES (100-170 MHz)	Channel Spacing / Pas des Canaux	FREQUENCY/ FREQUENCES (200-400 MHz)	Channel Spacing /Pas des Canaux
GROUND/SOL	26-69.95	50				225-400	50
ALOUETTE III	30-69.95	50				225-399.975	25
BO-105 CB	30-87.975	25		IO8-I5I.975 1O8-I51 975*	25	225-399.975	25

*Reception Only

NAVIGATIONAL AIDS/AIDES A LA NAVIGATION

NATION: NETHERLANDS

TYPE	HF (MHz)	HOMER/Balise de Ralliement	NAVIGATIONAL AIDS/ HF/Aides de la navigation/ Canaux (KHz)	IFF/SSR Transponder	CHANNEL SPACING /Pas des Canaux (KHz) HF
GROUND/SOL					
ALOUETTE III				UNKNOWN	
BO-105 CB			AD 2780 TACAN; LDNS AN/ASN-128; MAP READER KG-I 0/4 connected to LDNS	UNKNOWN	

GROUND/AIRCRAFT RADIOS/RADIOS SOL/AIR

NATION: NORWAY

TYPE	VHF FM COMMUNICATIONS (MHz) TRANSMISSIONS VHF/FM (MHz)			VHF FM COMMUNICATIONS (MHz) TRANSMISSIONS VHF/FM (MHz)		VHF FM COMMUNICATIONS (MHz) TRANSMISSIONS VHF/FM (MHz)	
	FREQUENCY/ FREQUENCES (10-100 MHz)	Channel Spacing / Pas des Canaux	Type Squelch/ de silencieux	FRFQUENCY/ FREQUENCES (100-170 MHz)	Channel Spacing / Pas des Canaux	FREQUENCY/ FREQUENCES (200-400 MHz)	Channel Spacing /Pas des Canaux
BELL 412 SP	30-87.975 (1)	25		116-151.975 (I)(2)	25	225-399.975 (1),(3)	25

NOTES:

(1) Vinson secure voice
(2) Dual Installation. Can be used as airborne relay
(3) HAVE QUICK

NAVIGATIONAL AIDS/AIDES A LA NAVIGATION

NATION: NORWAY

TYPE	HF (MHz)	HOMER/Balise de Ralliement	NAVIGATIONAL AIDS/ HF/Aides de la navigation/ Canaux (KHz)	IFF/SSR Transponder	CHANNEL SPACING /Pas des Canaux (KHz) HF
BELL 412 SP		VHF/FM; UHF	ADF190-1790KHz; VOR/ILS 108-I 179MHz; MARKER BFACON; RADIO ALTIMETER; DME	I ,2~3A,3C,4	

GROUND/AIRCRAFT RADIOS/RADIOS SOL/AIR

NATION: PORTUGAL

TYPE	VHF FM COMMUNICATIONS (MHz) TRANSMISSIONS VHF/FM (MHz)			VHF FM COMMUNICATIONS (MHz) TRANSMISSIONS VHF/FM (MHz)		VHF FM COMMUNICATIONS (MHz) TRANSMISSIONS VHF/FM (MHz)	
	FREQUENCY/ FREQUENCES (10-100 MHz)	Channel Spacing / Pas des Canaux	Type Squelch/ de silencieux	FRFQUENCY/ FREQUENCES (100-170 MHz)	Channel Spacing / Pas des Canaux	FREQUENCY/ FREQUENCES (200-400 MHz)	Channel Spacing /Pas des Canaux
GROUND/SOL							
PUMA 51	30-87.975	25	Carrier to Noise	108-155.975	25	225-399.975	25
ALOUETTE III	30-75.95	50	Signal-plus-Noise Ratio	116-149.975	25	225-399975	25

NOTES:

(1) Frequency Agile
(2) Secure Communications Capability
(3) Secure and Agility Capabilities are foreseeing within 2/3 years
(4) Will be changed within 2/3 yrs to 30-87.95 MHz with secure and agility capabilities
(5) Will be changed to 108-173.975 and 255-399.750 MHz with secure and agility capabilities (HAVEQUICK 1&2/SATURN)

NAVIGATIONAL AIDS/AIDES A LA NAVIGATION

NATION: PORTUGAL

TYPE	HF (MHz)	HOMER/Balise de Ralliement	NAVIGATIONAL AIDS/ HF/Aides de la navigation/ Canaux (KHz)	IFF/SSR Transponder	CHANNEL SPACING /Pas des Canaux (KHz) HF
GROUND/SOL					
PUMA SI	2-29.9999	100-400 MHz	ADF (200-800 KHz) VOR/ILS/MB; Radio Altimeter; Radar; TACAN; Doppler	1,2,3C	
ALOUETTE III		121.5 MHz	ADF (200-800 KHz)	3C	

GROUND/AIRCRAFT RADIOS/RADIOS SOL/AIR

NATION: SPAIN

TYPE	VHF AM COMMUNICATIONS (MHz) TRANSMISSIONS VHF/FM (MHz)			VHF COMMUNICATIONS (MHz) TRANSMISSIONS VHF/FM (MHz)		VHF COMMUNICATIONS (MHz) TRANSMISSIONS VHF/FM (MHz)	
	FREQUENCY/ FREQUENCES (10-100 MHz)	Channel Spacing / Pas des Canaux	Type Squelch/ de silencieux	FRFQUENCY/ FREQUENCES (100-170 MHz)	Channel Spacing / Pas des Canaux	FREQUENCY/ FREQUENCES (200-400 MHz)	Channel Spacing /Pas des Canaux
GROUND/SOL	30-76	50	NST	116-149.975	25	225-399.975	25
AB-212	30-75.95	50	NST	116-149.975 155-163.600[1]	25	225-399.975	25
BO-105	30-87.975	25	NST	116-149.975	25	225-399.975	25
BK-I 17 (G.C.)	30-87.975	25		116-149.975	25	225-399.975	25
OH-58	30-75.95	50	NST	116-149.975	25	225-399.975	25
UH-1H	30-75.95	50	NST	116-149.975	25	225-399.975	25
CH-47	30-87.975	25		116-149.975	25	225-399.975	25
UPER PUMA AF	30-87.975	25		116-149.975 116-173975	25	225-399.975	25
SH-3 (NAVY)	30-87.975	25		118-155.975 156-173975	25	225-399.975	25
OH-6 (AF)				116-149.975 116-135.975	25	225-399.975	25
SH-60B (NAVY)	30-87.975	25		156-173.975	25	225-399.975	25
PUMA (AF)	30-87.975	25		116-173.975	25	225-399.975	25
SIKORSKY 76	30-87.975	25		116-149.975	25	225-399.975	25
AS 532UC AS 532UL similar	30-87.95	25	NST	119-149.975	25	225-399.975	25

[1] Navy.

NAVIGATIONAL AIDS/AIDES A LA NAVIGATION

NATION: SPAIN

TYPE	HF (MHz)	HOMER/Balise de Ralliement	NAVIGATIONAL AIDS/ HF/Aides de la navigation/ Canaux (KHz)	IFF/SSR Transponder	CHANNEL SPACING /Pas des Canaux (KHz) HF
GROUND/SOL GROUND/SHIP	2-29.999 RECEPTION ONLY		TACAN 200-525 KHz		
AB-212 NAVY	2-29.999	UHF/VHF FM	ADF 190-1750KHz; VOR/ILS 108-117,95 MHz; RADIO ALT; DME; TACAN	I,2.3/A&C 1,2,3/A NAVY	50
AB-212	2-29.999	VHF-AM	ADF 190-1750KHz; VOR/ILS; RADIO ALT; GPS	I,2.3/A&C	1
BO-105 G.C.	2-29.999	VHF FM	ADF 190-1750KHz; VOR/ILS 108-117,95 MHz; RADIO ALT; DME; GPS; DOPPLER	1 2,3/A&C	
BO-105	2-29.999	VHF FM	ADF 190-1750KHz; RADIO ALT; GPS; DOPPLER	1 2,3/A&C	0.1
BK-117 (G.C.)	2-29.999	VHF FM	ADF 190-1750KHz; VOR/ILS 108-117,95 MHz; RADIO ALT; DME; GPS	A,B,C	
OH-58	2-29.999		ADF 100-3000 KHz	I,2,3/A&C	
UH-IH	2-29.999	VHF FM	ADF 190-1750KHz; VORI/LS 108-117.95 MHz	1,2,3/A&C	50 for 1 KHz
CH-47	2-29.999	VHF FM	ADF 190-1750KHz; VOR/ILS 108-117.95 MHz; RADIO ALT; GPS/NAVSTAR; DME	1,2,3/A&C	50 for 0.1 KHz
SUPER PUMA AF	2-29.999	UHF/VHF FM	ADF2OO-1749.5 KHz/2181-2183 KHz; VOR/ILS 108-117.95 MHz; RADIO ALT; DME; NAV SYS NADIR; RADAR OMEGA/GPS	1,2,3/A&C	50
SH-3 (NAVY)	2-29.999	UHF	ADF 190-1750KHz; VOR/ILS 108-117.95 MHz; RADIO ALT; DME; GPS; DOPPI.FR	1,2,3/A&C	
OH-6 (AF)		UHF	ADF 190-1750 KHz	1,2,3/A&C	
SH-60B (NAVY)	2-29.999	UHF	ADF (UHF/AM ONLY); DOPPLER; DME; TACAN; RADIO ALT	1,2,3/A,C & 4	
PUMA (AF)	2-29.999		ADF 190-1750KHz; VOR/ILS 108-117.95 MHz; RADIO ALT; DME; GPS; RADAR	1,2,3/A&C	50
SIKORSKY 76 AF		UHF/VHF FM	ADF 190-1750KHz; VOR/ILS 108-117.95 MHz; RADIO ALT; DME; GPS; RADAR	1,2,3/A&C	50
AS-532UC & UL	2-29.999	UHF/VHF FM	ADF 190-1750KHz; VOR/ILS 108-117.95 MHz; RADIO ALT; DME; GPS; RADAR	1,2,3/A&C	0.1

GROUND/AIRCRAFT RADIOS/RADIOS SOL/AIR

NATION: TURKEY

TYPE	VHF FM COMMUNICATIONS (MHz) TRANSMISSIONS VHF/FM (MHz)			VHF FM COMMUNICATIONS (MHz) TRANSMISSIONS VHF/FM (MHz)		VHF FM COMMUNICATIONS (MHz) TRANSMISSIONS VHF/FM (MHz)	
	FREQUENCY/ FREQUENCES (10-100 MHz)	Channel Spacing / Pas des Canaux	Type Squelch/ de silencieux	FRFQUENCY/ FREQUENCES (100-170 MHz)	Channel Spacing / Pas des Canaux	FREQUENCY/ FREQUENCES (200-400 MHz)	Channel Spacing /Pas des Canaux
AB-204	24-51.9			118-135.95			
AB-205	30-51.9			118-135.95		200-399.975	
UH-IH	30-69.95			116-149.95		225-399.975	
UH-60 Sikorsky	30-87.975			116-151.975		200-399.975	
AS-532 UL COUGAR	30-87.975			118-155.975		225-399.975	
AH-1P	30-75.95			116-149.975		225-399.975	
AH-1W	30-87.975			118-155.975		225-399.975	

NAVIGATIONAL AIDS/AIDES A LA NAVIGATION

NATION: TURKEY

TYPE	HF (MHz)	HOMER/Balise de Ralliement	NAVIGATIONAL AIDS/ HF/Aides de la navigation/ Canaux (KHz)	IFF/SSR Transponder	CHANNEL SPACING /Pas des Canaux (KHz) HF
AB-204			ADF 190-1750KHz; VOR 108-116.95KHz		
AB-205	2-18		ADF 190-1750KHz; VOR 108-116.95KHz R-1041		
UH-1H	2-18		ADF 190-1750KHz; VOR 108-116.95KHz R-1041		
UH-60S Sikorsky	2-29.9999		ADF 100-3000 KHz; VOR 108-117.95 KHz MB/DOPPLER	1 ,2,3,C	
AS 532 AL Cougar	2-29.9999		ADF 190-1749.5; VOR 108-117.95, 329.15-335; MB; DOPPLER; GPS	1,2,3,C	
AH-IP			ADF 100-3000 KHz; V()R 108-117.95 KHz; MB		
AH-1W			ADF 100-3000 KHz; V()R 108-117.95 KHz; MB; DOPPLER	I,2,3,C	

GROUND/AIRCRAFT RADIOS/RADIOS SOL/AIR

NATION: UNITED KINGDOM

TYPE	VHF FM COMMUNICATIONS (MHz) TRANSMISSIONS VHF/FM (MHz)			VHF FM COMMUNICATIONS (MHz) TRANSMISSIONS VHF/FM (MHz)		VHF FM COMMUNICATIONS (MHz) TRANSMISSIONS VHF/FM (MHz)	
	FREQUENCY/ FREQUENCES (10-100 MHz)	Channel Spacing / Pas des Canaux	Type Squelch/ de silencieux	FRFQUENCY/ FREQUENCES (100-170 MHz)	Channel Spacing / Pas des Canaux	FREQUENCY/ FREQUENCES (200-400 MHz)	Channel Spacing /Pas des Canaux
GROUND/SOL	30-75.975	25/50				225-399.975	50
GAZELLE	30-75.975	25/50				225-399.975	50
LYNX Mk7&9	30-75.975	25		118-135.975	25	225-399.975	25
PUMA	30-75.975	25/50		118-135.975	25	225-399.975	25
CHINOOK HC2	30-75.975	25		118-135.975	25	225-399.975	25
WESSEX	30-75.975	25		118-135.975	25	225-399.975	25
SEA KING Mk 3	30-75.975	25		118-135.975	25	225-399.975	25
SEA KING Mk 4	30-75.975	25		118-135.975	25	225-399.975	25

NAVIGATIONAL AIDS/AIDES A LA NAVIGATION

NATION: UNITED KINGDOM

TYPE	HF (MHz)	HOMER/Balise de Ralliement	NAVIGATIONAL AIDS/ HF/Aides de la navigation/ Canaux (KHz)	IFF/SSR Transponder	CHANNEL SPACING /Pas des Canaux (KHz) HF
GROUND/SOL	1.5-29.999		ARI Radar 2500-3300 MHz; TACAN Radar 962-1213MHz		
GAZELLE		VHF FM	Lightweight navigational aid with auto-chart display		
LYNX Mk 7	2-29.999	VHF FM	DECCA TANS; DECCA Type 71 Doppler	1 ,2,3,4,C	I
LYNX Mk9		UHF		I ,2,3,4,C	
PUMA	2-29.999	VHF (FM); U/VHF (AM)	RACAL RNS 252/GPS; VOR/ILS 108-117 95 MHz; TACAN	1 ,2,3,4,C	1
CHINOOK Mk 2	2-29.999	VHF (FM); VHF (AM); UHF	RACAL TANS 252; VOR 108-117.95MHz; ADF'; DECCA DOPPLER 71; TACAN	1 ,2,3,4,C	1
WESSEX Mk 2	2-29.999	VHF (AM); UHF	Trimble 2000T GPS	I ,2,3	1

WESSEX Mk 4	2-29.999	VHF (AM); UHF	Trimble 2000T GPS; ADF 200-1700 KHz; DECCA Mk 19; VOR 108-133.95 MHz	1,2,3,C	1
SEA KING Mk 3	2-30	VHF (FM); VHF (AM); UHF 2828 KHz	DECCA TANS; ADF 190-1799.5 KHz; VOR 108-117 95 MHz; DME	1,2,3,C	1
SEA KING Mk 4	2-30	UHF	DECCA TANS; ADF 190-17995KHz; VOR 108-11795 MHz; DME	1,2,3,4,C	I

GROUND/AIRCRAFT RADIOS/RADIOS SOL/AIR

NATION: UNITED STATES

TYPE	VHF FM COMMUNICATIONS (MHz) TRANSMISSIONS VHF/FM (MHz)			VHF FM COMMUNICATIONS (MHz) TRANSMISSIONS VHF/FM (MHz)		VHF FM COMMUNICATIONS (MHz) TRANSMISSIONS VHF/FM (MHz)	
	FREQUENCY/ FREQUENCES (10-100 MHz)	Channel Spacing / Pas des Canaux	Type Squelch/ de silencieux	FRFQUENCY/ FREQUENCES (100-170 MHz)	Channel Spacing / Pas des Canaux	FREQUENCY/ FREQUENCES (200-400 MHz)	Channel Spacing /Pas des Canaux
GROUND/SOL	30-76			116-149.975	25		50
OH-6A	30-75.95	50	N&T	116-135.975	25	225-399.95	50
OH-58 A/C/D	30-75.95	50	N&T	116-135.975	25	225-399.95	50
UH-1 B/C/D/H/M	30-75.95	50	N&T	116-135.975	25	225-399.95	50
UH-1 N	30-75.95	50	N&T	116-149.975	25	225-399.975	25
UH-60A	30-75.95	50	N&T	116-149.975	25	225-399.95	25
CH-46E	30-75.95	50	N&T			225-399.95	50
CH-47 C/D	30-75.95	50	N&T	116-135.975	25	225-400	50
CH-53 A/D	30-75.95	50	N&T			225-399.975	50
CH-53 E	30-75.95	50	N&T			225-399.975	50
CH-54 A/B	30-75.95	50	N&T	116-135.975	25	225-400	50
AH-1G/S	30-75.95	50	N&T	116-135.975	25	225-400	50
AH-1 J	30-75.95	50	N&T			225-399.975	25
AH-1 T	30-75.95	50	N&T			225-399.975	25
AH-1 W	30-75.95	50	N&T			225-399.975	25
AH-64	30-75.95	50	N&T	116-135.975	25	225-400	50

NAVIGATIONAL AIDS/AIDES A LA NAVIGATION

NATION: UNITED STATES

TYPE	HF (MHz)	HOMER/Balise de Ralliement	NAVIGATIONAL AIDS/ HF/Aides de la navigation/ Canaux (KHz)	IFF/SSR Transponder	CHANNEL SPACING /Pas des Canaux (KHz) HF
GROUND/SOL	2-29.999				
OH-58 A/C/D			ADF 100-3000 KHz; VOR/ILS 108-117.95 MHz	I ,2,3,4,C	
UH-I B/C/D/IT/M	2-29.999	VHF	ADF 100-3000 KHz; VOR/ILS 108-117.95 MHz*	I ,2,3,4,C	I KHz
UH-1N	2-29.999	VHF/UHF	ADF 100-3000 KHz; VOR/ILS 108-117.95 MHz; TACAN; RADAR ALT;RADAR BEACON		
UH-60 A		VHF	ADF 100-3000 KHz; VOR/ILS 108-117.95 MHz; G/S	1 ,2,3,4,C	
CH-47 C/D	2-29	VHF	ADF 100-3000 KHz*; VOR/ILS 108-117.95 MHz	1,2,3,4,C	*1 KHz
CH-53 A/D	2-29.999		ADF 190-1750 KHz; TACAN; Radar Altimeter; Radar Beacon		
CH-53 E	2-30	VHF/UHF	ADF 100-3000 KHz; VOR/ILS 108-117.95 MHz; TACAN; RADAR ALT;RADAR BEACON	1 ,2,3,4,C	
AH- I E/F		VHF/UHF	ADF 190-1750 KHz; TACAN; Radar Altimeter; Radar Beacon	1 ,2,3,4,C	
AH-I W		VHF/UHF	ADF 190-1750 KHz; TACAN; Radar Altimeter; Radar Beacon	1,2,3,4,C	
AH-64 A		VHF/UHF	ADF 190-1750 KHz; TACAN; Radar Altimeter; Radar Beacon	I,2,3,4,C	

CHAPTER 3 - HELICOPTER TASKING MESSAGES

0301. Requests from units for helicopter support are passed through the chain of command to the tasking agency using the Helicopter Request Message (HELQUEST). The tasking agency passes the task to the helicopter unit by Helicopter Tasking Message (HELTASK). The HELQUEST/HELTASK message formats are identical. The message by which the tasking agency informs a unit of the acceptance, delay or refusal of a request for Helicopter support is the Acknowledgement to Helicopter Request Message (HELACK). The formats of the HELQUEST/HELTASK and HELACK messages are at Annexes 3A-B.

Editors Note: These messages have been formatted for ADatP3 use and the versions which appear in APP-11 (and which are now the authentic versions) may differ slightly.

ANNEX 3A - HELICOPTER REQUEST/TASKING MESSAGE (HELQUEST/HELTASK)

Purpose. This is the message format for requesting and tasking helicopter support (Note 1).

Format and Content: (Note 2).

Precedence - Action (Note 3)		Message Instructions	
FROM:		Subject Indicator Code (SIC)	
TO: INFO:		Security Classification (Note 4)	Example:
HELQUEST/HELTASK - is the first word of the message. One should be deleted. (Note 5)			HELQUEST/~~HELTASK~~
IDENTIFIER - (Note 6)			19BDE/13/272230ZJAN94
TASK DESCRIPTION			
A.	Quantity and type of aircraft.		A. 2 PUMA
B.	Nature of task (e.g. recce/troop lift/casualty evacuation).		B. TROOP LIFT
C.	Pick-up point(s); Grid Co-ordinates/ Identification/ Nickname.		C. RED 651
D.	Destination(s) or Recce Target(s); Grid Co-ordinates/Identification/Nickname.		D. SJ432123
TASK TIMINGS (ZULU)			
E.	Date Time Group (DTG) at pick-up point(s) or on task.		E. 280600ZJAN94
F.	Not later than DTG.		F. 280700ZJAN94
G.	Estimated duration of task (hours and minutes).		G. 1 HR 30 MIN

PASSENGER DETAILS	
H. Passengers - total number to be carried, with any appointment titles. If casualty(ies), state number and whether lying or sitting.	H. 32
FREIGHT DETAILS	
I. Freight - weight in kg and description; state if under-slung load, state approximate dimensions.	I. NIL
COMMUNICATIONS DETAILS	
J. Callsign and frequency at pick-up point(s).	J. 29 ON 50.2
K. Callsign and frequency at destination.	K. 46 ON 51.9
L. Briefing (callsign and frequency/location).	L. 0 ON 50.2
M. Debriefing (callsign and frequency/location).	M. NIL
TACTICAL INFORMATION	
N. Combat intelligence update with preferred routes.	N. ENEMY TO NORTH OF PUP. APPROACH FROM SOUTH EAST
SPECIAL INSTRUCTIONS/REMARKS	
O. Any instructions not covered in paragraphs A to N. This serial may also include details of any arrangements for liaison and logistic support.	O. LOW WIRES WEST OF PUP

NOTES:

1. Formations which also have light fixed wing aircraft in support may use this format to task them.

2. See APP-11 for detailed instructions on message format.

3. Immediate requests should be given the precedence of IMMEDIATE. For pre-planned requests - as required.

4. Normally RESTRICTED or higher classification, but in an emergency the message may be sent in clear.

5. All sections of the message are to be completed by the originator. When a section is not applicable the word 'NIL' must be used.

6. The request and number group identifies the requesting formation and serial number of its message. To avoid duplication, the signal address group of the requesting unit prefaces a serial number, allocated in accordance with formation SOPs and DTG.

7. The quantity and type of helicopters requested by a unit are only recommendations. The tasking authority will use the information as a guide when planning the mission.

8. For complex operations, system for matching passengers/loads to helicopter types should be indicated at para O.

CHAPTER 4 - HELICOPTER TACTICAL OR NON-PERMANENT LANDING SITES

Related Publication:

ACP-136 Communication Instructions - Panel Signalling.

0401. **Aim.** The aim of this chapter is to describe the selection criteria and systems for marking helicopter landing sites for day and night operations.

0402. **Introduction.** The selection criteria and systems of marking helicopter landing sites for day and night operations described in this chapter represent the ideal situation. At times it may be necessary to accept reduced criteria, however the ultimate decision will rest with the helicopter commander or formation leader. In future, the dimensions may require alteration as new types of helicopter are introduced.

0403. **Terminology:** The following terms are used frequently in the chapter:

a. **Cleared to Ground Level.** To ensure a safe landing, it is essential that solid obstacles and inflammable and loose material be cleared; the term 'cleared to ground level' is used to indicate this. It is not necessary to clear grass up to 0.3 m (1 ft) high that might cover a level field unless a fire risk exists. See Note.

b. **Hard Surface.** The centre of the landing point, where the helicopter lands, must be solid enough to bear its weight. The term “hard surface” is used to indicate this situation.

NOTE: If ground obstructions cannot be cleared, some helicopter operations can be carried out without the helicopter actually landing. The same dimensions of clearing and ground markings are required, and the helicopter will hover above the obstructions that prevent it from landing. Every effort should be made by the ground troops to improve the landing point surfaces to enable the aircraft to land.

0404. **Landing Site Dimensions.** The size of the landing site will depend on the number and size of landing points within it and the dispersion required between landing points based on the tactical situation. Supported units must either comply with helicopter unit requirements or co-ordinate a reduced size of LS before an operation starts. The criteria provided in Annex 4A, Figures 4A-I to 4A-VIII represent the minimum dimensions of each landing point. Helicopter units will designate Size 1, 2, 3, 4, or 5 Circular Landing Points or 3, 4, or 5 Rectangular Landing Points to be utilised by their units for specific operations. Numerous considerations, such as helicopter type, unit proficiency, nature of loads, climatic conditions and day or night operations may apply to the size of the landing points used. In the absence of

information from the helicopter unit, a Size 5 Landing Point will be chosen. The minimum recommended distance between landing points within a landing site where no consideration is given to dispersion between helicopters is as follows:

a. **Size 1** 25 m.

b. **Size 2** 37 m.

c. **Size 3** 50 m.

d. **Size 4** 80 m.

e. **Size 5** 100 m.

NOTE: Distances are measured from centre to centre.

0405. **Approaches.** Ideally, there should be obstruction-free approach and exit paths into wind. The criteria below represent the minimum required to permit full flexibility in helicopter operations. Approaches that do not meet these criteria may be acceptable depending on the nature of the operations undertaken; e.g. in light wind conditions a single approach and reciprocal exit may be acceptable. However, when these criteria cannot be met, the helicopter unit must be consulted:

a. **By Day.** Within the selected approach and exit paths, the normal maximum obstruction angle to obstacle should not exceed 6^0 as measured from the edge of the cleared to ground level area to a distance of 500 m (maximum obstacle height 52 m (170 ft)) (see Figure 4A-IX). This limit may be waived at the discretion of the pilot.

b. **By Night.** The selected approach and exit paths should contain a sector of not less than 16° in azimuth as measured from the edge of the cleared to ground level area. The width of the approach and exit paths should not be less than the width of the area of the landing site cleared to 0.6 m. Less than 50 m will not be acceptable, and more than 100 m is not necessary. Within the selected approach/exit paths, the maximum obstruction angle should not exceed 4° as measured from the edge of the cleared to ground level area to a distance of 3000 m (maximum obstacle height 210 m (690 ft)) (see Figure 4-IX). However:

(1) When the emergency or primary methods ('T' or 'inverted Y') of marking the landing site are used (see Annex 4B) the maximum obstruction angle on the approach and exit paths of obstacles is 4° (or 1 in 16).

(2) When a glide path indicator is used, the obstruction angle is increased to 6° and should be extended to the range of the indicator or 3000m whichever is greater, and cover the projection angle of the indicator in

azimuth.

(3) There are no restrictions on the obstruction angle to obstacles other than those within the approach and exit paths. However, prominent obstructions in the area of the landing site not marked on the map as such must be reported to the helicopter unit.

0406. **Surfaces.** The surface of the centre of the landing point must be even and sufficiently firm to allow a fully loaded ground vehicle (e.g. ¾ ton for Reconnaissance Helicopter, 4 tons for Light Transport Helicopter and 10 tons for Medium Transport Helicopter) to stop and start without sinking. The whole landing point must be cleared of any loose material or piles of dust/sand that could be blown up by the rotors of the helicopter. Landing points with sandy or dusty surfaces should be stabilised or covered by an agreed method. Any snow on any landing point should be packed or removed to reveal any hazardous objects and reduce the propagation of blowing snow; a marker is essential to provide a visual reference for depth perception and also to reduce the effect of whiteout.

a. **Slope of Ground.** Ideally, the ground on the landing site should be level. Where there is a slope, it should be uniform. If the following criteria cannot be met, the use of the landing site must be confirmed by the helicopter unit:

(1) **By Day**. Slope should not exceed 7° (or 1 in 8) in any direction if the helicopter is to land. However a greater slope may be acceptable for hover operations.

(2) **By Night.** A reverse slope, as viewed from the approach path, is not normally acceptable. Forward and/or lateral slope should normally not exceed 3°.

NOTE: When co-ordination with the helicopter unit is possible, these angles of slope may be exceeded, based on the capability of the aircraft.

0407. **Concealment.** A landing site in close proximity to the Forward Line of own Troops (FLOT) should be masked from enemy ground and electronic observation. The selection of approach and exit routes should also be based on the availability of good masking features.

0408. **Marking of Landing Sites and Landing Points.** Landing sites and points should be marked when circumstances allow. Marking should be kept to the minimum and only displayed when actually required, in order not to disclose positions to the enemy. Some minimal methods of marking landing sites are contained in ACP-136.

a. **Displays of Markers.** There is a danger of insecure markers being dislodged by the downwash from the helicopters and causing damage by being sucked up into the rotor or engine. Panels or lights should therefore be firmly secured,

or removed before the helicopter hovers above them.

b. **Methods of Marking.** Some minimal methods of marking the landing site by day and night are illustrated in Annex 4B, but other methods may be used according to national doctrine and a thorough briefing will be necessary before a night operation is mounted.

0409. **Visual Identification of Landing Sites.** Identification of landing sites may be effected by one of the following methods:

a. **Carbide-Inflated, Yellow Marker Balloons.** (The balloons must be lowered once the helicopters have acknowledged recognition.)

b. **Coloured Smoke, Flashing Lights, or Pyrotechnics.** To prevent deception by the enemy, the following identification sequences should be used:

(1) Ground unit releases smoke etc., on request.

(2) Helicopter pilot states the colour he has seen.

(3) Ground unit confirms colour is correct.

c. Pre-arranged Display of Marshallers, Figures, Letters or Light Codes.

0410. **Designation of Landing Zones and Sites.** Landing zones are designated by colour or codeword. Landing sites are designated by landing zone colour or codeword/prefix and number. Where unit landing zones are large, the numbering of landing sites can be grouped by geographical or sub-unit areas. Thus the landing sites in one company area may be known as RED 30, RED 31, RED 32 etc. and in another company area the landing sites may be designated RED 40, RED 41 etc.

0411. **Radio Aids.** Whenever radio communication and electronic aids (including air traffic control facilities) are located at a landing site, antennae should be offset from the landing site to prevent the enemy from fixing on the location of the site with electronic devices. Only essential communication for control of helicopters at the landing site should be used.

0412. **Coloured Lights.** Red lights are reserved for the indication of obstacles.

0413. **Night Operations:**

a. **Night Tactical Landing Light System (Unaided Vision):**

(1) At night, approaches to a tactical landing site require the use of a tactical landing light system. Such a system must be capable of providing the aircrew with visual cues that will aid in determining

alignment with the approach axis, angle of descent, rate of closure and provide a ground hover reference. The source of light may consist of hand-held lights, beanbag lights, phosphorescent tubes etc. Regardless of the type of light source used, it must be capable of being secured so that the wind force of the helicopter will not cause it to move or be extinguished. If a battery-powered light is used, it is desirable that each light yields approximately the same light intensity. A white light provides the best light source for a tactical landing light system.

(2) The 2 recommended tactical landing light systems are the 'T' and the 'inverted Y' (see Annex 4B). Both systems provide the visual cues required to execute a safe approach to a tactical landing site. Other systems requiring fewer lights may be used as an emergency system (such as in Annex 4B, Figure 4B-IV); however, no less than 2 should ever be used. Viewing of one light causes an apparent motion of the light and results in a false interpretation by the aircrew. Also important is the separation between the lights. If only 2 lights are used, a minimum separation of 5m (paces) is required. The dimensions of the 'T' and 'inverted Y' and the national preferences for use are shown in Annex 4C.

(3) The aircrew should be familiar with the visual cues for the tactical landing light system being used. Annex 4B provides a description of the visual perspectives that appear when approaching either the 'T' or the 'inverted Y' tactical landing light system.

(4) Prior to arriving at a landing site where a tactical landing light system is employed, it is essential that the aircrew know which system is being employed. The aircrew should receive such information from the supported unit in the pre-mission briefing or by radio from the ground party responsible for setting up the system.

The glideslope indicator used in land operations must cast 3 separate coloured beams of light: amber (top beam), green (centre beam), and red (bottom beam). Any variation of the colour coding must be clearly briefed to visiting aircrew.

b. **Landing Light System for Night Vision Devices:**

(1) The use of night vision devices can offer tactical advantages and reduce or remove the need for landing light systems. A number of factors will, however, govern the operational requirement for ground lighting:

(a) Ambient light levels.

(b) Visibility.

(c) Numbers of helicopters.

(d) Mission requirements

(e) Carriage of underslung loads.

(2) In general terms, a single helicopter moving troops may not require a landing aid if light levels and visibility are adequate, whereas large-scale operations may. Supported units should liaise with aviation units at an early stage of the planning process to determine the operational requirement.

(3) The intensity of most electric lights used in ground landing light systems is too bright for light amplification devices such as night vision goggles (NVG). To use ground lights when the aircrews are equipped with NVG it will be necessary to reduce the light emission to an appropriate level. If these modifications are not carried out, the performance of the NVG will seriously be reduced. When a ‘T’ or ‘inverted Y’ tactical landing light system is provided, the aircrew will use it in the same manner as when conducting an approach with unaided vision.

0414. **Helicopter Landing Site Report.** Reports providing information on helicopter landing sites should be submitted in the HELLSREP format at Annex 4D.

ANNEX 4A - HELICOPTER LANDING POINTS

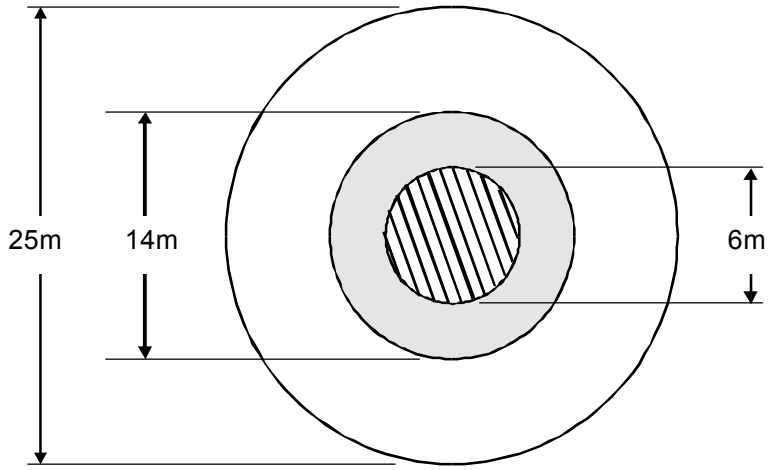

Figure 4A.I - Size 1 Landing

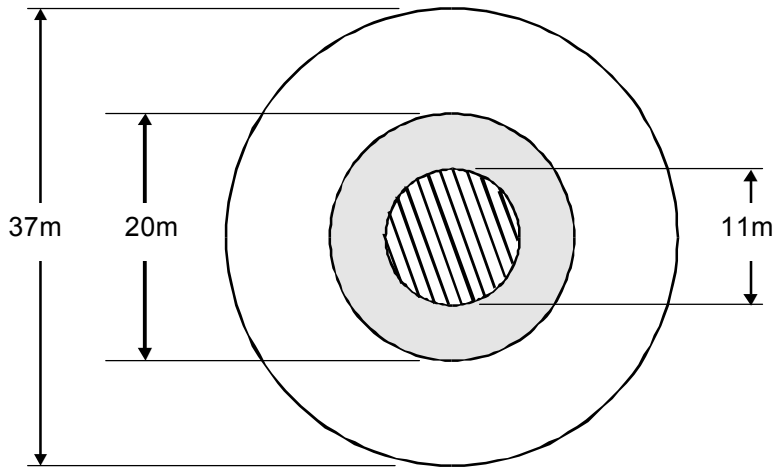

Figure 4A.II - Size 2 Landing Point

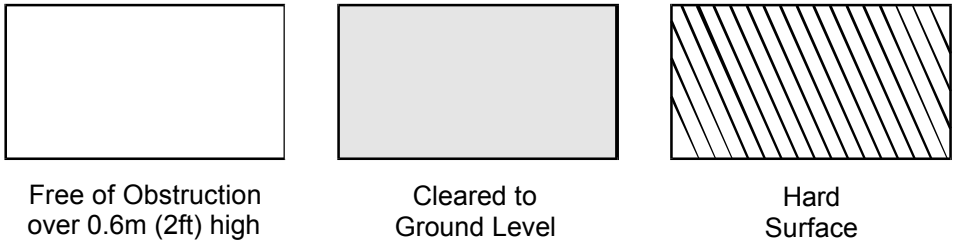

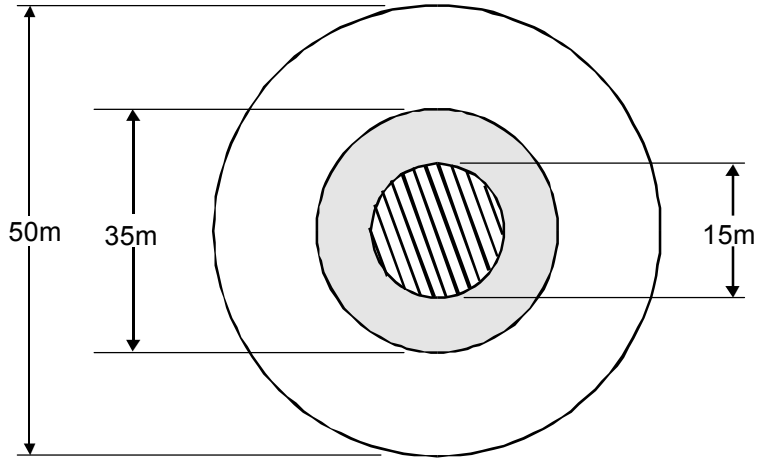

Figure 4A.III - Size 3 Landing Point Circular

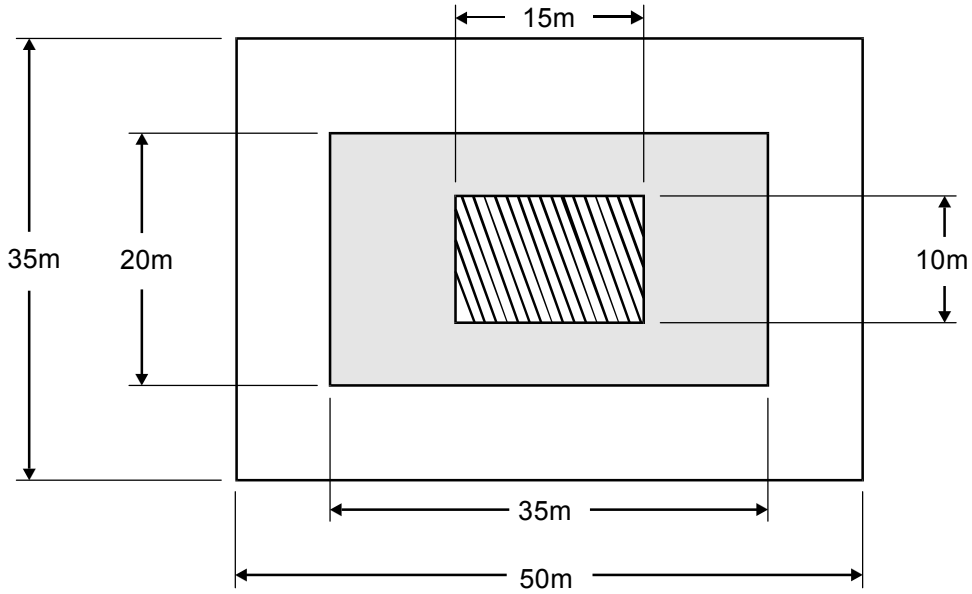

Figure 4A.IV - Size 3 Landing Point Rectangular

Free of Obstruction over 0.6m (2ft) high

Cleared to Ground Level

Hard Surface

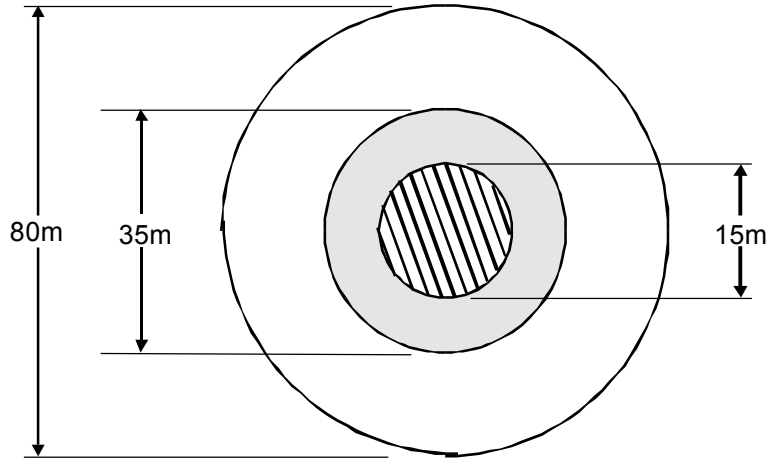

Figure 4A.V - Size 4 Landing Point Circular

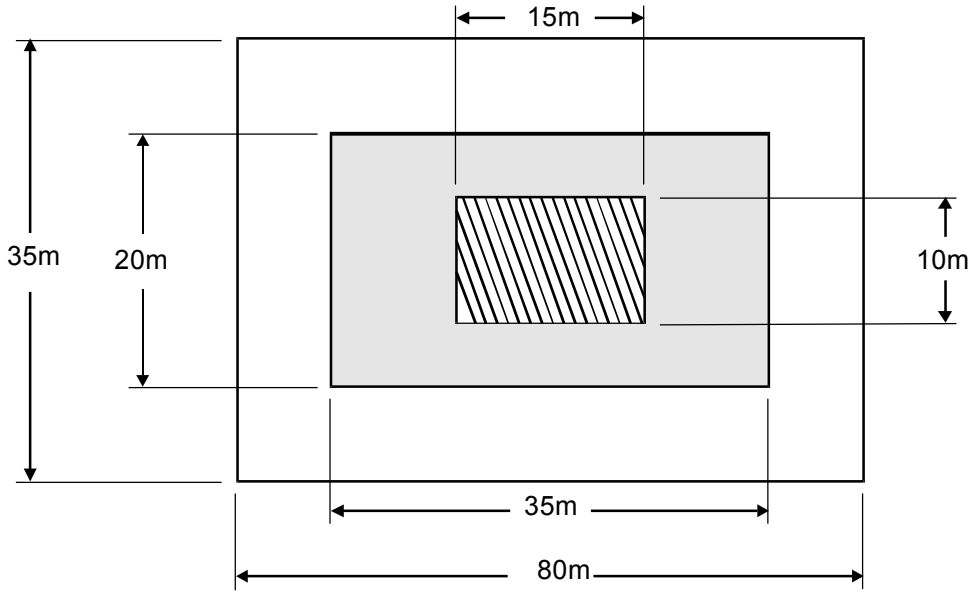

Figure 4A.VI - Size 4 Landing Point Rectangular

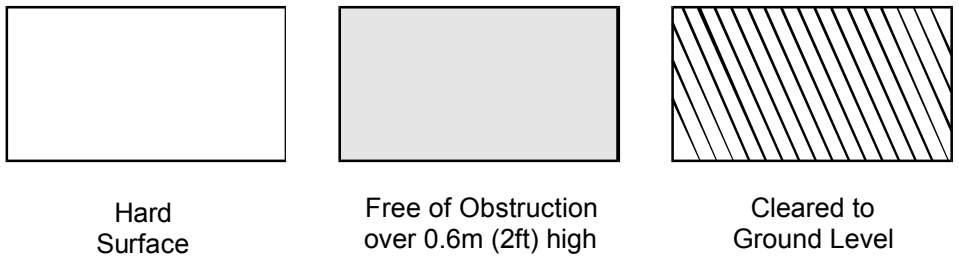

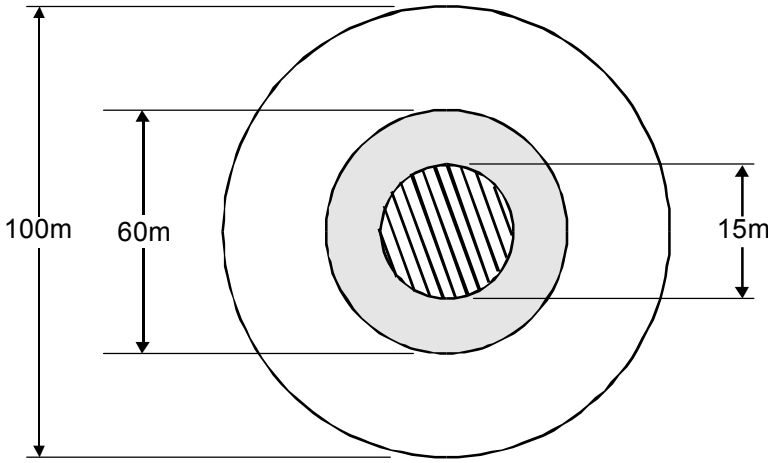

Figure 4A.VII - Size 5 Landing Point Circular

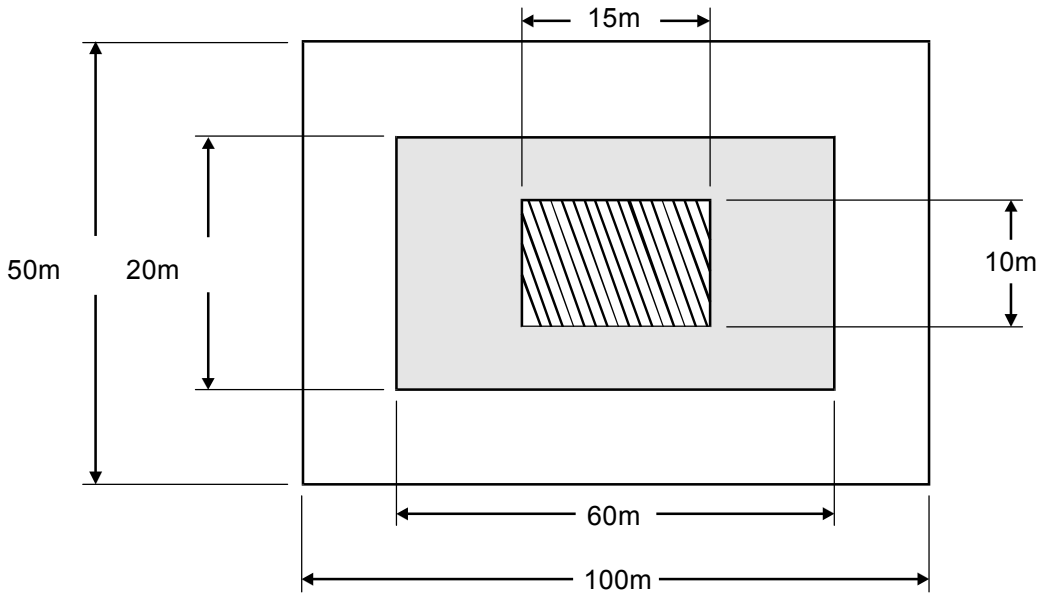

Figure 4A.VIII - Size 5 Landing Point Rectangular

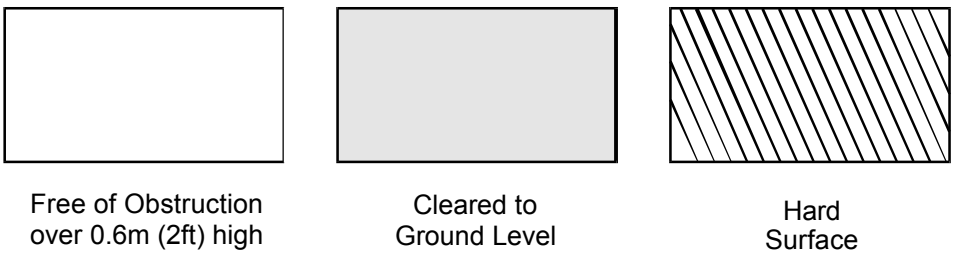

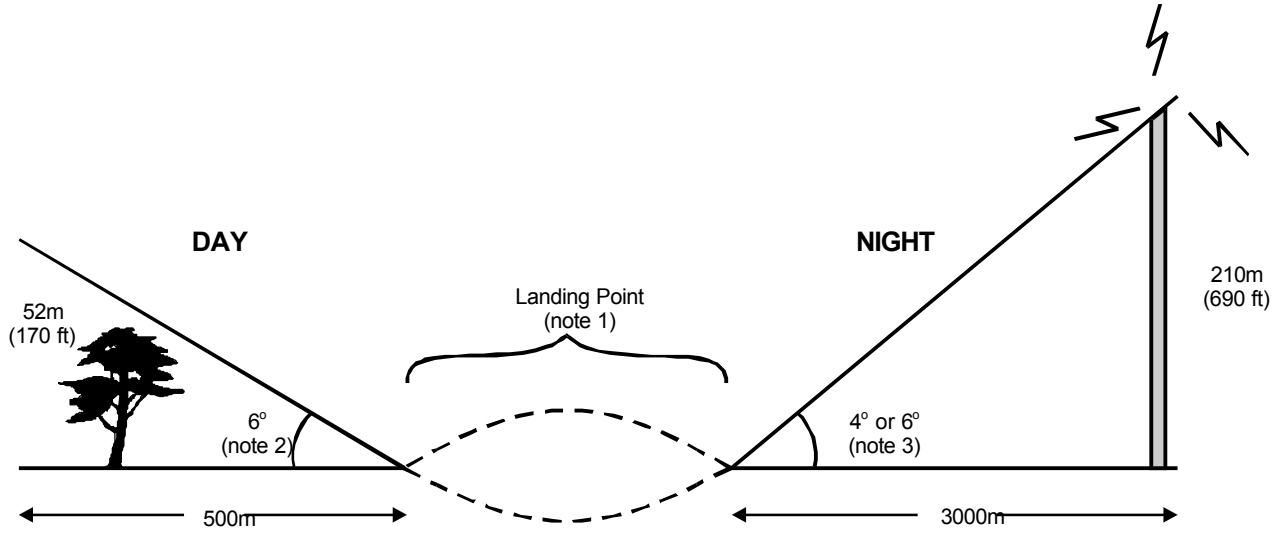

Figure 4A.IX - Landing Point Obstruction Angle on Approach & Exit Paths - Day & Night

NOTES:

1. The obstruction angle is measured from the point where the landing or take-off paths intersect the stipulated 'cleared to ground level' area of the landing point.

2. By day the obstruction height cannot exceed an approach angle of 6° out to 500 m from the landing point.

3. By night the obstruction height cannot exceed an obstruction angle of 4° out to 3000 m from the landing point unless a glideslope indicator is used when the obstruction angle can be 6°.

4. Pilots may intercept the glide slope at any height.

(INTENTIONALLY BLANK)

ANNEX 4B - MARKING OF HELICOPTER LANDING SITES

4B1. **Day Marking**:

a. **Identification.** The letter 'H' indicates a helicopter landing site. A ground marshaller, or panels, or any type of obvious marker such as a small flag may indicate individual landing points within a landing site. Where it is necessary to differentiate between neighbouring landing zones, sites or points, details will be given in the operation plans and/or orders.

b. **Wind Direction.** Indication of wind direction is desirable and may be provided by the marshaller with his hands raised and his back to the wind. Smoke may also be used but should be placed at the downwind side to avoid obscuring the touchdown point (see Figure 4B-I).

4B2. **Night Marking**:

a. **Emergency Method**. Two light vehicles are placed 35 m apart and 35 m downwind of the centre of the landing point with their headlight beams intersecting at the centre of the landing point. (See Figure 4B-IV).

b. **'T'**. A description of the 'T' and the visual cues displayed for the aircrew when on the approach are:

(1) Spacing between lights of the 'T' should be approximately 10 m (10 paces); however, nations may vary this slightly (see Annex 4C). Approaches to the 'T' should terminate at a point 5m to the left or right of the base of the ‘T’. This approach, or touch down point, should be marked with a light. If a glideslope indicator is used with the ‘T’, it should be positioned 20m beyond the bar of the ‘T’ and aligned with the stem.

(2) Depending on the distance from the landing point and the height of the helicopter the 3 lights in the stem may appear as a single light. As the helicopter comes closer to the landing point, spacing between the lights in the stem begins to appear. Upon intercepting the desired approach angle, the lights in the 'T' appear as shown in B, Figure 4B-II. If the distance between the lights appears to increase from the normal sight picture, the approach is becoming too steep (see C, Figure 4B-II). If the distance between the lights appears to decrease from the normal sight picture, the approach is becoming too shallow (see D, Figure 4B-II). Upon detection of any visual changes in the distance between the light, adjustments should be made to keep the helicopter on the desired approach angle.

(3) Alignment of the helicopter with the desired direction of landing can be determined by observing the relative position of the stem in relation to the bar of the ‘T’. If the stem points to the left, the helicopter is too far to the right of course (see E, Figure 4B-II). If the stem points to the right, the helicopter is too far to the left of course (see F, Figure 4B-II). Upon detection that the helicopter is not aligned with the approach axis of the ‘T’, adjustments should be made to reposition it on the desired ground track.

c. **‘Inverted Y’**. A description of the ‘inverted Y’ and the visual cues displayed for aircrew when on approach are:

(1) The recommended spacing between lights is shown in A, Figure 4B-III. Approaches to the 'inverted Y' should terminate with the nose of the helicopter centred on line with the first 2 lights (see A, Figure 4B-III). If a glideslope indicator is used with the 'inverted Y' it should be positioned beyond the second light in the stem and aligned with it.

(2) Depending on the distance from the landing point and the altitude of the helicopter, the 2 lights in the stem may appear as a single light. As the helicopter comes closer to the landing point the second light appears and the spacing between the lights begins to increase. Upon intercepting the desired approach angle, the lights in the 'inverted Y' would appear as shown in B, Figure 4B-III. If the distance between the lights appears to increase from the normal sight picture, the approach is becoming too steep (see C, Figure 4B-III). If the distance between lights appears to decrease from the normal sight picture, the approach is becoming too shallow (see D, Figure 4B-III). Upon detection of any visual change from the desired approach angle adjustments should be made to reposition the helicopter on the desired approach angle.

(3) Alignment of the helicopter with the desired direction of landing is determined by observing the relative position of the front 2 lights in relation to the stem. If the spacing between them and the stem is shifted to the left, the helicopter is to the right of course (see E, Figure 4B-III). If the spacing between the front 2 lights and the stem is shifted to the right, the helicopter is to the left of course (see F, Figure 4B-III). Upon detection that the helicopter is not aligned with the approach axis, an adjustment should be made to reposition the aircraft on the desired ground track.

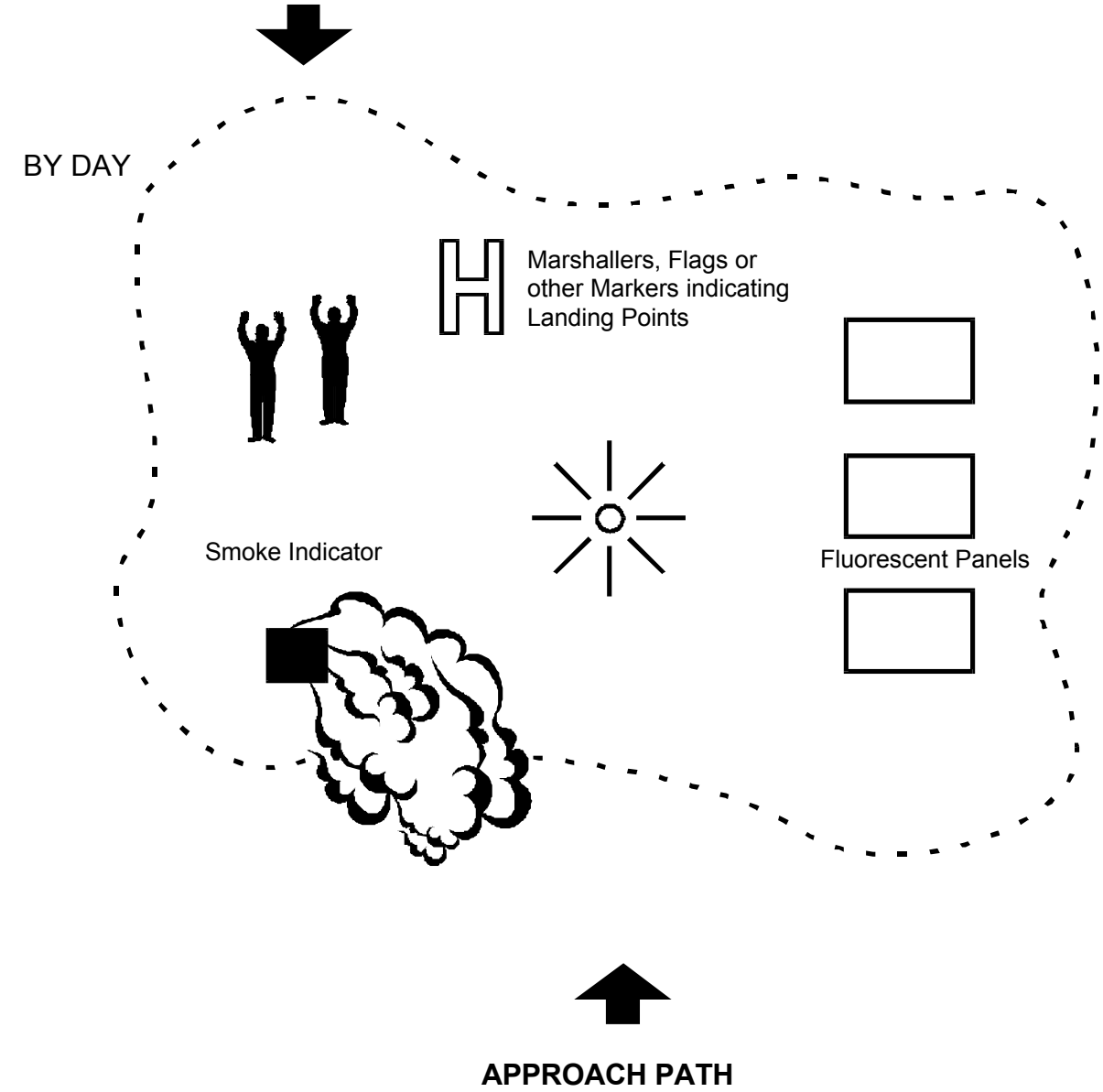

Figure 4B.I - Visual Marking of a Helicopter Landing Site

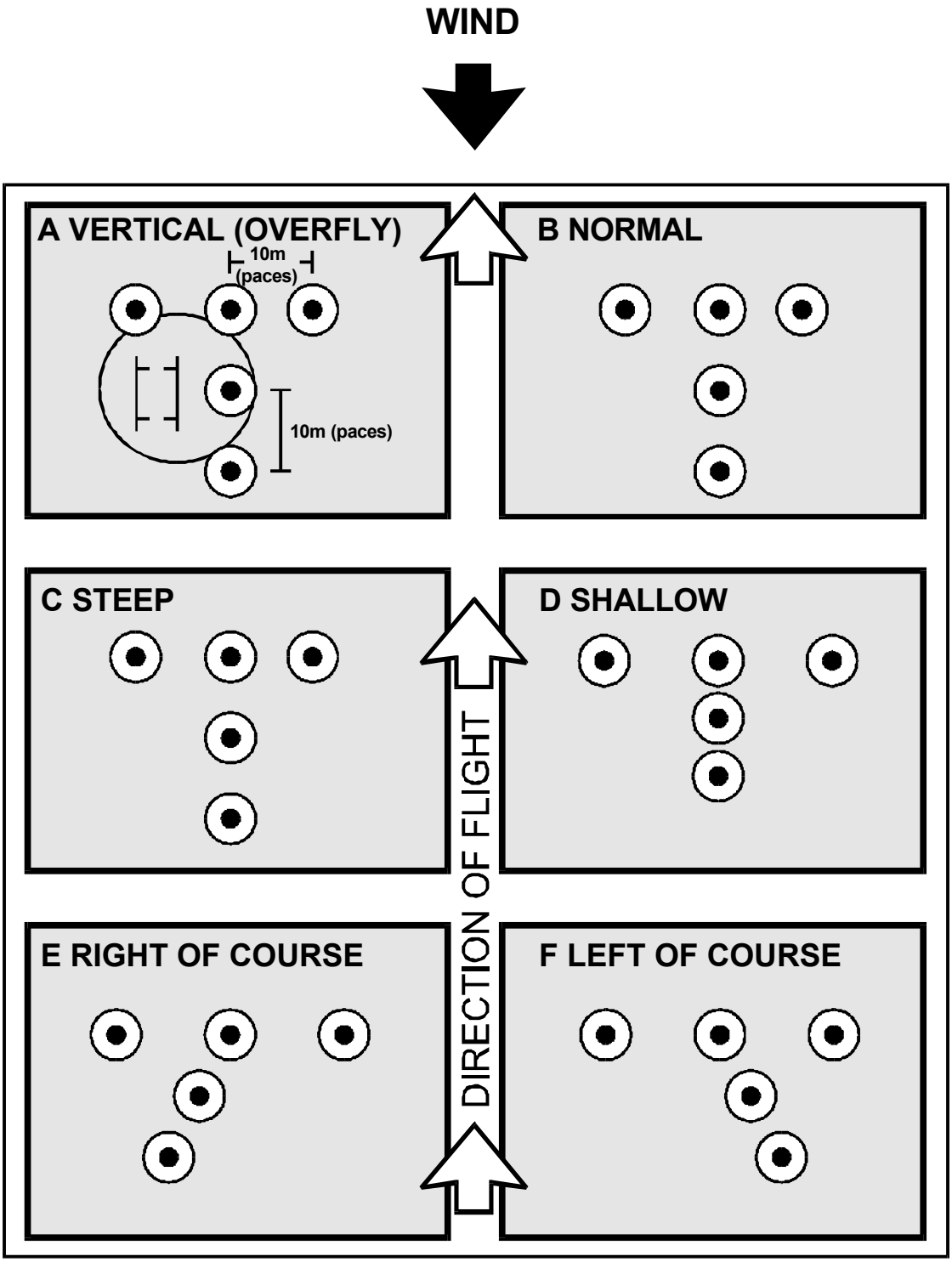

Figure 4B.II - Approach to a Lighted 'T'

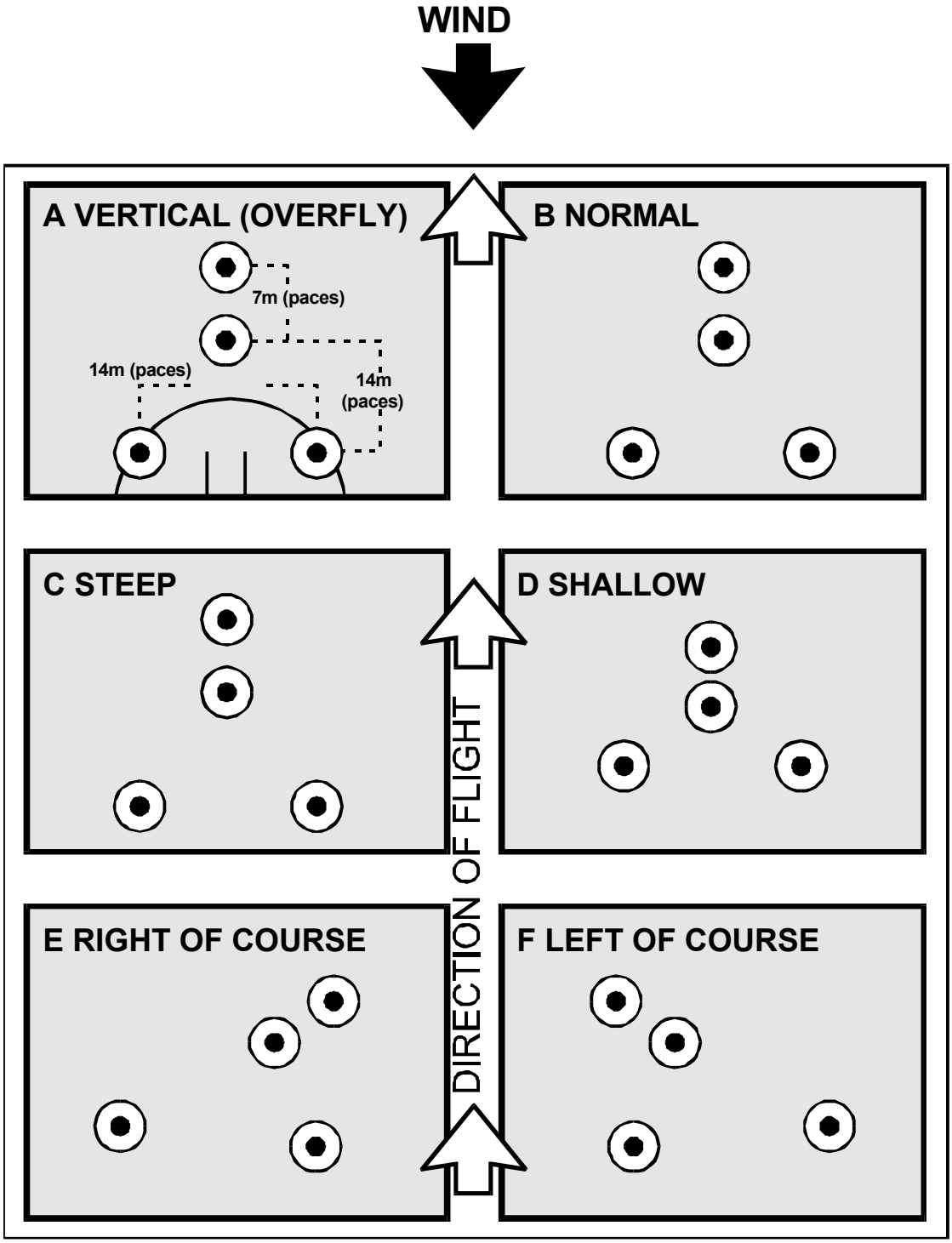

Figure 4B.III - Approach to a Lighted 'Inverted Y'

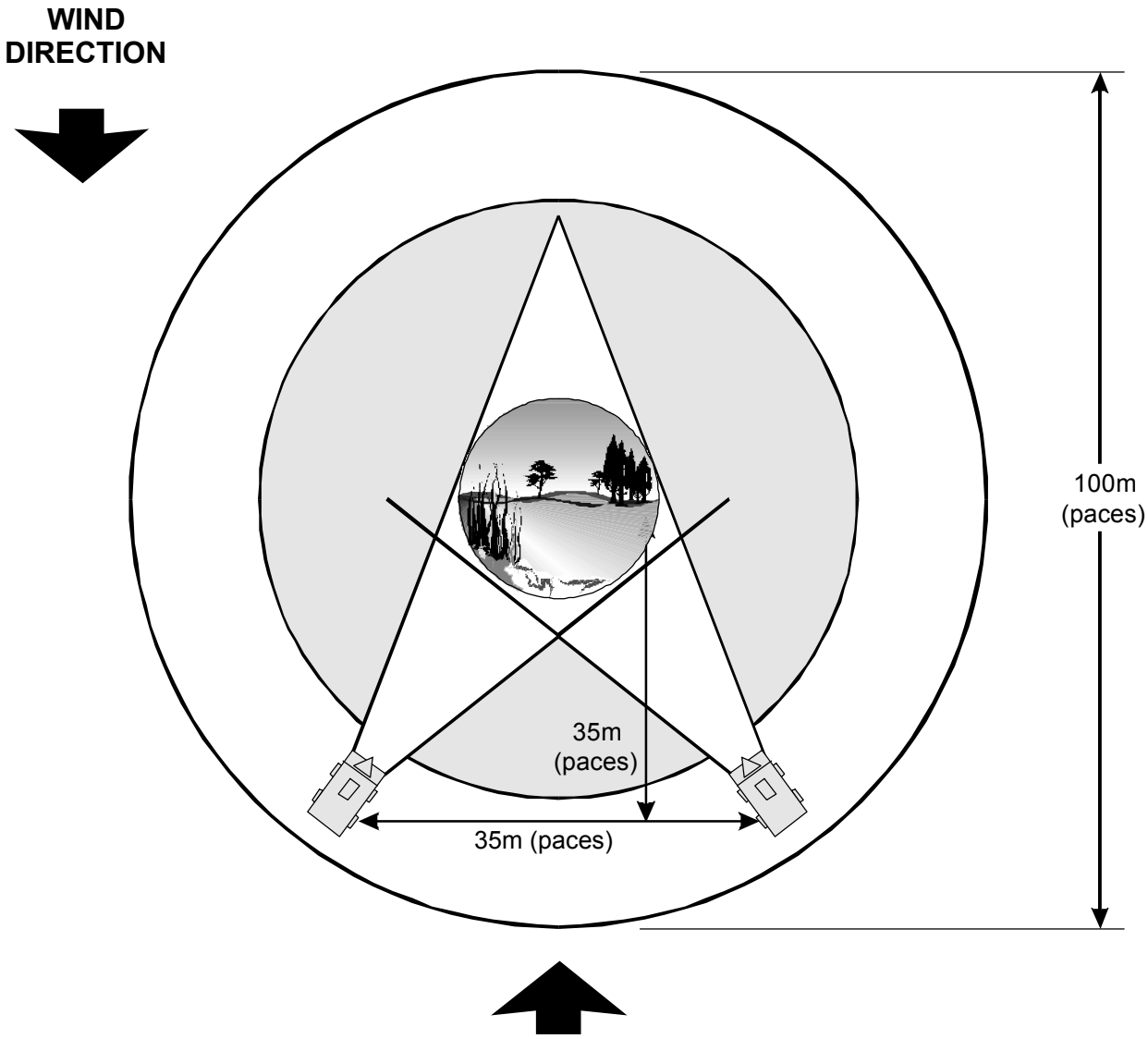

Figure 4B.IV - The Emergency Method of Marking a Landing Point

ANNEX 4C - NATIONAL PREFERENCES FOR NIGHT APPROACH LIGHTING SYSTEMS AND VARIATIONS IN CONFIGURATION

The following table shows the preferred light system for each nation:

Country	'T'	'Inverted Y'	Notes
BE	'T'		
CA	'T'		(1)
DA	'T'		
FR	'T'		
GE	'T'		
GR	'T'		
IT	'T'		
LU	'T'		
NL	'T'		
NO	'T'		
PO	'T'		
SP	T	Inverted ‘Y’	(2)
TU	'T'	Inverted ‘Y’	(3)
UK	'T'		
US	'T'	'Inverted Y'	(4)

NOTES:

1. CA prefers the 'T' but will accept the 'Inverted Y'.
2. SP prefers the inverted ‘Y’ but will accept the ‘T’.
3. TU prefers the ‘T’ but will accept the inverted ‘Y’.
4. US prefers the inverted ‘Y’ but will accept the ‘T’.

When using the 'T' night approach lighting system, each nation may vary slightly the distance between individual lights. The following diagram and table show the variations:

```
O---A---O---A---O
        |
        B
        |
        O
        |
        B
        |
        O
```

Country	Distance 'A'	Distance 'B'	Notes
BE			
CA	5 m	15 m	
DA	10 m	10 m	(2)
FR	15 m	15 m	(1)
GE	10 m	10 m	(1)
GR	10 m	10 m	
IT	10 m	10 m	
LU			
NL	10 m	10 m	
NO	5 m	8 m	
PO	10 m	10 m	
SP	5 m	8 m	
TU	5 m	8 m	
UK	10 m	10 m	
US	5 m	8 m	

NOTES:

1. There may be 4 lights in the 'stem' of the French and German 'T'.
2. Minimum Size – 5.

ANNEX 4D - HELICOPTER LANDING SITE REPORT

HELLSREP

Subject line of message and serial number followed by Helicopter Landing Site Designation (allocated prior to reconnaissance) as required and map sheet series designation, sheet number, edition designation, in that order.

ALFA Units of Measure. See Note 5.

BRAVO **DTG.** Give the DTG on completion of the reconnaissance.

CHARLIE **Location.** Given as grid reference of extremities of LS. Prefixed by 2 letter grid zone designators when there is any possibility of uncertainty about the part of the map used.

DELTA **Orientation of Long Axis of LS.**

ECHO **Number and Size of Landing Points (LP).** Size to be given by number and shape in accordance with Annex 10A.

FOXTROT **Method of Deplanement.** The following numerical code is used to denote the recommended method of deplanement:

	Number Code
Land	1
Hover	2
Rope	3
Abseil or Winch	4

The method is determined by the nature of the ground. For helicopters to land the LPs must be cleared of all obstructions liable to damage wheels/skids/underbelly or aerials. Unless otherwise briefed, the maximum ground slope must not exceed:

By day - 7° (1 in 8)

By night - 3° (1 in 20).

Maximum helicopter manoeuvre heights above the landing surface for other methods are:

a. **Hover** - 6 feet.

b. **Rope** - 30 feet.

c. **Abseil/winch** - 200 feet.

GOLF

LS Surface. Should be reported in 3 parts. First it should be classified as:

		Letter Code
1.	**Firm** - can support the helicopter and can be used by 2 wheel drive vehicles or 4 wheel drive vehicles and trailers, unless heavy and continuous use is intended.	W
2.	**Moderate** - can be used by 3 or 4 ton vehicles which should be able to start from rest using 4 wheel drive.	X
3.	**Soft** - 4 wheel drive vehicles cannot start from rest but might cross if already on the move.	Y

The surface should then be described as:

	Letter Code
Sand	A
Grass	B
Scrub	C
Snow	D
Ice	E
Marsh	F
Dust	G
Any other surface	H

NOTES:

1. When ground is covered by snow additionally report sub-surface.

2. It should be reported whether the surface will recirculate, reporting Y for Yes and N for No. Recirculation is the effect of the downwash of the helicopter that is liable to pick up sand, dust or snow, and blow through the rotors thereby severely reducing the pilot's visibility. This will have an effect on the frequency at which helicopters can land. Wind speed at ground level at the periphery of a helicopter's rotors can be in excess of 60 knots.

Example: Hard surface of snow covered grass, the snow is liable to recirculate - G W BD Y.

HOTEL

1. **Direction of Approach of Helicopters.**

2. **Direction of Exit for Helicopters.**

1 and 2 are, whenever possible, into wind but often enemy positions/fire and other obstacles may dictate alternative courses.

(**Note:** Direction of approach is not necessarily the same as the direction of landing, which will normally be decided by the helicopter pilots.)

JULIET

Wind Direction and Speed. Wind direction is reported as the bearing from which the wind is coming.

KILO

Approach Angle. An approach angle of 4° by night is used unless a glide slope indicator is available. The height and proximity of obstacles on the selected approach path dictate the approach angle. The normal maximum obstruction angle is 6° by day is used, (see Para 0405). Other limits may be pre-briefed.

LIMA

Location/Recognition Aids. Any location/recognition aids to be used must be pre-briefed and allocated a numerical code, for example:

	Number Code
Green Smoke	1
Yellow Panels	2

MIKE **Landing Aids.** Landing Aids must be pre-briefed and allocated a numerical code, for example:

	Number Code
Torch	1
Angle of Approach Indicator (AAI)	2

NOVEMBER **Cloud Cover and Estimated Height above LS.** This is reported as the proportion of the sky obscured in 1/8ths (e.g. half cover 4, small patches 1). Height of lowest cloud above the LS also to be estimated in unit of measure given in ALFA.

PAPA **Visibility and Temperature.** This is reported using units of measure given in ALFA.

QUEBEC **Enemy.** Known enemy positions, strength and weapons are to be reported in the following way: sighting number followed by grid reference, strength and any weapons critical to the accomplishment of helicopter landings, for example:

Q1	135684.	70	2 Anti-tank guns
2	137592.	100	

ROMEO **Position of Supported Unit (if remaining adjacent to LS).** This is sent to avoid being mistaken for the enemy.

SIERRA **Obstructions.** Obstructions in the direction of helicopter approach and exit are to be reported using the following letter code:

	Letter Code
Buildings	A
Trees	B
Poles	C
Pylons and high tension wires	D
Others	E

The sequence of this report is as follows:

Grid reference, code letter, height in unit of measure given in ALFA.

For example: S124568 B30.

TANGO **Vehicle Exits from LS.** Report grid reference of exit points for vehicles.

UNIFORM **Restrictions on Troop Movement.** Indicate the degree of restrictions to rapid deployment of troops from the LS. Report by the following numerical code:

	Number Code
Heavy restriction	1
Moderate	2
Unrestricted	3

VICTOR **Remarks.** Other pertinent information such as landmark to the landing zone can be described in this paragraph.

NOTES:

1. Groups need not be signalled, when information is either not known, or not required. NC (no change) can be used to confirm information given in the reconnaissance briefing.

2. Helicopters can easily be spoofed by the enemy unless pre-briefed recognition signals are used by personnel manning the landing site.

3. When smoke is being used as a location aid for the helicopters the supported unit should indicate when the smoke is being released, but not the colour. The pilot of the lead helicopter should, subject to Emission Control (EMCON) restrictions, read back the colour seen and the supported unit confirm that the correct colour has been spotted.

4. A wave-off signal should be pre-briefed before the supported unit deploy in the event of the landing site being compromised immediately prior to the helicopter landing.

5. Unless otherwise indicated at para ALFA the following standard units of measurement will be used:

   a. Metres (for dimensions in the horizontal plane).
   b. Feet (for height/vertical dimensions).
   c. Degrees Magnetic.
   d. Knots.

e. Degrees Celsius.

6. Number letter codes may be combined to show a compromise on halfway condition. If necessary plain language may be used.

APPENDIX 4D-1 - EXAMPLE OF A HELICOPTER LANDING SITE REPORT

Meaning (a)		Encode (b)
Subject line of message and serial number followed by Helo Landing Site Designator. Map series M722 Sheet 26.		HELLSREP 2 OAK 3 M722.26.
ALFA	Units of measurement if different from those at Note 5.	A.NIL.
BRAVO	Reconnaissance completed 0530Z. on 18 Feb 94.	B.180530Z. FEB 94.
CHARLIE	Location of the 4 extremities of the LS are: Grid reference 876318, 877317, 872315, 871316.	C.876381. 877317. 872315. 871316.
DELTA	Long axis of LS is orientated 230°M/050°M.	D.230/050.
ECHO	There is room for 3xSize 4 Rectangular LPs and 1xSize 2 LP.	E.3xSize 4 Rect/1xSize 2.
FOXTROT	The surface of the LPs will allow the helicopters to land to deplane troops.	F.1.
GOLF	Surface of the LS is firm (it can support the helicopter) and consists of sandy soil which is dry enough to be blown up by the helicopter.	G.WAY.
HOTEL	After considering long axis, wind direction and strength, obstructions, and enemy positions, the recommended approach direction is 200°M magnetic and the exit direction is 260°M.	H.1.200.2.260.
JULIET	Wind is blowing from 200°M; strength is 30 knots.	J.200/30.
KILO	Obstacles on recommended approach path dictate a minimum approach angle of 4°.	K.4°.
LIMA	Of the briefed location and recognition aids carried by the supported unit which were allocated code numbers: Radio Beacon 1 Strobe Beacon 2 Red Panels 3 Only the strobe and red panel have been deployed.	L.2.3.

Meaning (a)		Encode (b)
MIKE	Of the briefed landing aids carried by the supported unit which were allocated the code numbers: Torch T 1 AAI 2 White marker lights 3 Only the Torch T and the AAI have been deployed.	M.1.2.
NOVEMBER	The sky is half covered by cloud (4/8ths) which is estimated as being 600 ft above the LS.	N.4.600.
PAPA	Visibility is 5 km, temperature minus 2°C.	P.5000 minus 2.
QUEBEC	Enemy have been observed in 3 locations as follows: approx. 100 men with 2 anti-tank guns at grid reference 856331, approx. 80 men at 840275, and 3 tanks at 863325.	Q.1.856331.100. 2 anti-tanks 2.840275.80. 3.863325.3 tanks
ROMEO	As elements of the supported unit are remaining close to the LS their position is reported as grid reference 877316.	R.877316.
SIERRA	A set of pylons and high tension wires 90 ft high cross the approach, 1 km away. There are also some trees 45 ft high ½ km away.	S.879328D90. 878318B45.
TANGO	Clear exits for vehicles are grid reference 872315 and 876318.	T.872315.876318.
UNIFORM	The terrain will tend to restrict the movement of troops from the LS.	U.2.
VICTOR	The supported unit reports that a bald hill at grid reference 886316 is a landmark to the landing zone.	V. Bald Hill 886316

CHAPTER 5 - GENERAL SAFETY REGULATIONS FOR HELICOPTER USERS

Related Publications:

STANAG 3854 AT	Policies and Procedures Governing the Air Transportation of Dangerous Cargo
STANAG 3542 HIS	Technical Criteria for the Transport of Cargo by Helicopter

0501. **Aim.** The aim of this section is to standardise general safety regulations for units receiving support, and applies to all types of mission and all types of helicopter.

0502. **Scope:**

a. Within the scope of his flight mission, the aircraft commander has full authority in all matters concerning the operational safety of the aircraft. Users are not authorised to issue orders that may jeopardise the safety of the aircraft.

b. Should it become necessary in special missions to deviate from the safety regulations, the personnel concerned are to be briefed accordingly. Every command echelon can take additional safety measures for their area of command and with their own means, provided that the task is carried out correctly and in due time.

0503. **Definition.** The term “danger area”, as applied to helicopter operations, is the area around a helicopter on the ground extending 15 m from the tips of the main rotor blades and 15 m from the tips of the tail rotor blades.

0504. **Night Operations.** Safety procedures for night operations are essentially the same as for day except greater caution is required due to reduced vision. When night signals are used, care should be taken not to point lights directly at the helicopter crews. This is especially important if night vision devices are being used.

0505. **Refuelling.** Refuelling operations should not be conducted with passengers or dangerous cargo on board. Whenever practical, engines should be shut down for refuelling operations.

0506. **Personnel:**

a. Personnel may enter or leave the danger area only upon the signal from a crew member and in the direction indicated.

b. On slopes, personnel may only approach or withdraw from a helicopter with rotors engaged on the downslide side under direction of a crew member. If it

is necessary to emplane on the side of a helicopter closer to the slope, personnel should approach the helicopter from the downslope side and then move around the nose, to keep clear of the tail rotor. When deplaning on a slope, personnel must follow the crew's instructions and either reverse the emplaning procedure or remain close to the helicopter until it lifts off.

0507. **Vehicles:**

a. Vehicles may only enter the danger area of a helicopter for the purpose of loading or unloading operations or for the purpose of emplaning or deplaning and after the driver has been signalled accordingly by a crew member or marshaller acting on instructions from the helicopter crew. The driver must ensure that there are no obstructions extending above the basic structure of the vehicle, e.g. radio antennae, equipment.

b. Before loading vehicles onto helicopters, the following should be checked:

(1) Tightness of fuel tank caps, battery plugs and oil filler plugs.

(2) Vehicle fuel tanks are not exceeding 75% full and fuel canisters are not exceeding 90% of rated capacity.

(3) Security of equipment stored in vehicles.

(4) Verify status of radios and electronic equipment.

(5) Hazardous cargo stored in or on vehicles has been loaded in accordance with the approved STANAGs.

c. Vehicles are to be inspected for fuel leaks before loading; vehicles with fuel leaks are not to be loaded.

0508. **Dangerous / Hazardous Air Cargo.** All cargo, which might be deemed hazardous or dangerous (i.e. batteries, ammunition, fuel etc.) must, before loading, be declared to the helicopter crew in order that appropriate and safe loading procedures can be adopted.

CHAPTER 6 - HELICOPTER DAY AND NIGHT TACTICAL FORMATION FLYING

0601. **General**. Tactical helicopter formations are used to concentrate the required number of aircraft, in a co-ordinated manner, to mass firepower or deliver troops and/or cargo, to accomplish a mission or operation. While tactical helicopter formations are a fundamental part of airmobile operations, they are also employed for helicopter-borne operations. This chapter describes the basic techniques and principles of tactical helicopter formation flying under both day and night conditions, with consideration for the operational factors affecting planning and operations.

0602. **Definitions**. A tactical formation consists of two or more helicopters holding positions relative to each other which operate as a single entity, under the command of a formation leader, in the execution of a single mission or operation. Common terms and descriptions include:

a. **Formation Leader**. The individual given responsibility for the planning and conduct of the operation of the formation as a whole.

b. **Section**. Normally constitute two aircraft operating together in formation with one designated as lead and the other as the wingman. As a sub-component of a larger formation, the section leader may be given responsibilities or tasks for his section, but remains subordinate to the formation leader.

c. **Element**. A sub-component of a large formation, normally comprised of two or more sections with a designated lead having responsibilities in conjunction with the formation's operation, but subordinate to the formation leader. Elements should normally be composed of helicopters with similar capabilities.

Other common formation terms and descriptions are included at Annex 6A.

Formation Tactics

0603. The tactical helicopter formation should offer good mutual support, between individual aircraft, sections and/or elements, be manoeuvrable, manageable, and minimise vulnerability to attack from threat forces. The formation pattern(s) and flight profile(s) which best meet the requirements for a mission will be influenced by the tasks to be accomplished, terrain, weather, threat, aircraft available, and aircraft performance capabilities.

0604. Helicopter tactical formations may be flown at close, loose or extended spacing depending on operational considerations and factors. Similar considerations will determine the formation leader's selection of altitudes or flight profiles for the

mission. The descriptions of close, loose and extended are contained at Annex 6A. Close formation is usually inappropriate in a hostile environment because tactical manoeuvrability is restricted, the formation is more easily detected and engaged by the threat, the formation may be engaged as one target, and there is a higher probability of collateral damage within the formation. Therefore, more widely spaced formations, with the components of the formation having more freedom of manoeuvre are preferred for operations where there is a threat of being engaged.

0605. **Formation Separation and Spacing**. Visual separation is the basic method of maintaining separation and spacing between the aircraft of a formation. However, given a tactical situation requiring greater spacing between sections or elements of a formation, unsuitable terrain, and/or the displacement of pickup or landing zones, it may not be possible for sections or elements of a formation to maintain constant visual contact with each other. When visual contact cannot be maintained, procedural separation must be used to maintain the formation's tactical integrity and provide the desired spacing between the various sections and/or elements of the formation. The use of navigation check points with specific timings for separation and/or individual section/element routings are examples of procedural separation methods. Procedural separation is a prime planning consideration for operations in adverse weather with limited visibility and during night operations without NVD.

0606. **Mutual Support**. The type of formation flown should provide for the optimum mutual support between the aircraft, sections and/or elements of the formation to include:

a. The visual and electronic surveillance of the flight route and landing zones to detect and counter threats to the formation; and

b. The effective use of defensive fire support within the formation.

0607. **Visual Lookout Techniques**. Each crew within a formation should be allocated a sector of responsibility for lookout within the section or element. This technique provides for mutual support within the formation. For larger formations, each section/element provides similar mutual support to the other sections and/or elements by being assigned primary sectors of responsibility within the formation.

608. **Manoeuvrability**. The formation must be able to manoeuvre, while maintaining it's tactical integrity, follow route/heading changes (planned or unplanned) and evade air and/or ground threats. Furthermore, each wingman, section, and/or element must have freedom to manoeuvre within the formation to:

a. Maintain the desired flight profile (cover and concealment);

b. Execute evasive combat manoeuvres;

c. Change position in response to weather, threat, and terrain; and

d. Position his aircraft for landing.

0609. **Vulnerability**. The type and composition of tactical formation should be chosen to minimise vulnerability to engagement by threat forces. Tactical dispersal, to limit the number of aircraft which can be engaged, and the use of terrain for cover and concealment, to avoid detection and/or limit exposure to engagement, in combination with the principles of mutual support remain the primary means for reducing a helicopter formation's vulnerability. Nevertheless, more tightly spaced formations may at times be appropriate, e.g. for routing around isolated threats or concentrating the formation for landing, etc.

0610. **Weather**. Helicopter formations may operate in poor visibility and under low cloud to take advantage of the reduced acquisition ranges of visual and IR guided weapon systems. However, navigation and formation control becomes more difficult and spacing may have to be reduced to maintain the formation's integrity. In addition, when flying in adverse weather conditions, the possibility exists that the formation, or segments of the formation, may inadvertently encounter instrument meteorological conditions (IMC). Contingency plans for the break-up of the formation and recovery procedures on encountering IMC must be made and briefed to the formation prior to the mission.

Standard Helicopter Tactical Formation Types and Techniques

0611. There are two basic tactical formation types used for helicopter operations. They are Battle, as illustrated in Figures 6-I and 6-II, and Trail, as illustrated in Figures 6-III and 6-IV. However, the distinction between the two formation types is not absolute and planning/mission considerations may include adaptations of these two basic techniques. The relative tactical considerations and a comparison of these techniques are contained in Annex 6B. The level of threat, time, terrain, performance characteristics of the helicopters, the task/mission and other considerations affecting operations are all factors which the formation leader will have to considered in determining the appropriate formation type and tactics to be flown.

0612. **Battle Formation**. The wingman, section or element flying in battle formation, fly approximately line abreast with the lead aircraft, section or element. Spacing is chosen to offer good mutual cover to enable the formation to see attacking aircraft before the attacker reaches weapon release range, but not so far apart that the formation becomes unwieldy, or the mutual support within the formation is lost. Aircraft in battle formation control their own detailed routing to achieve the required track, and can therefore make maximum use of terrain cover and camouflaging background.

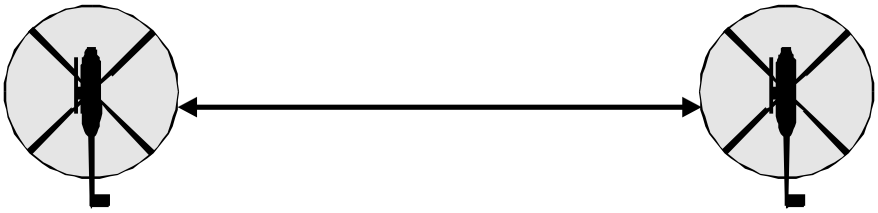

Figure 6-I: Section in Battle Formation

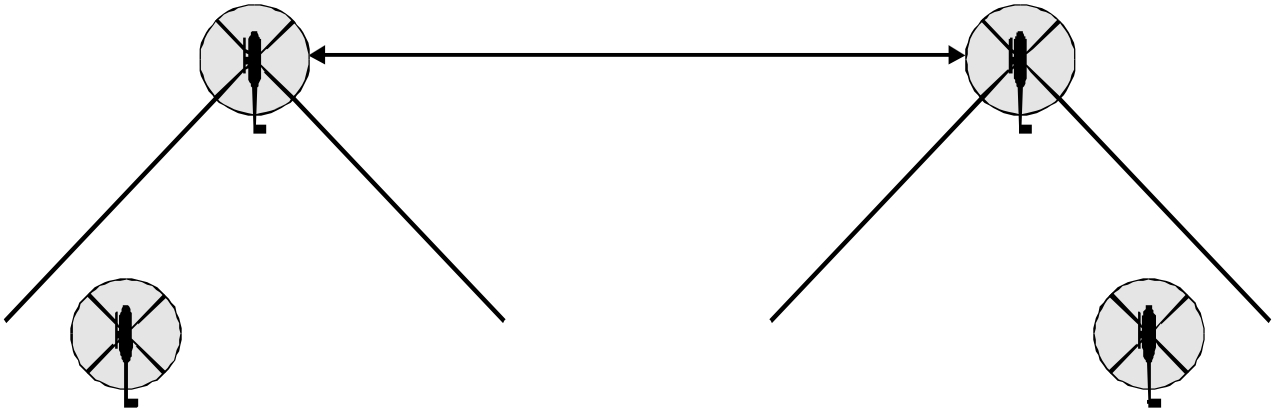

Figure 6-II: Element in Battle Formation (Sections in Trail Formation)

0613. **Trail Formation**. The wingman, section or element flying in trail formation has the freedom to move laterally in the arc extending 45 degrees to the port and starboard rear of the lead aircraft, section or element avoiding prolonged periods in line astern.

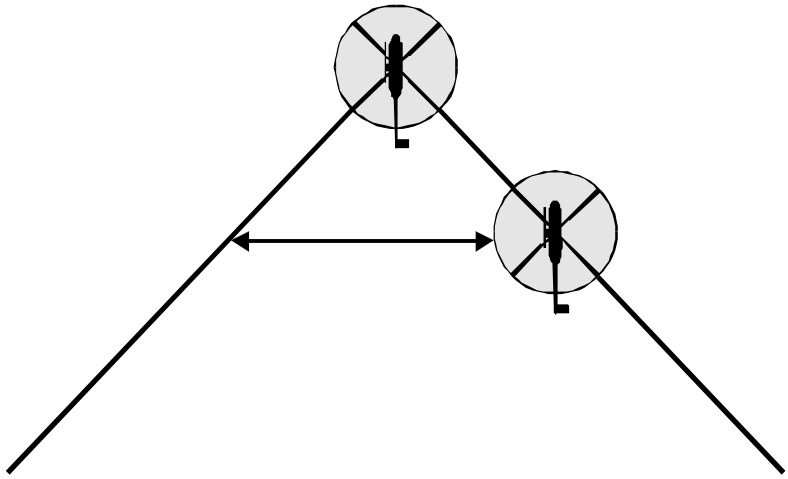

Figure 6-III: Section inTrail Formation

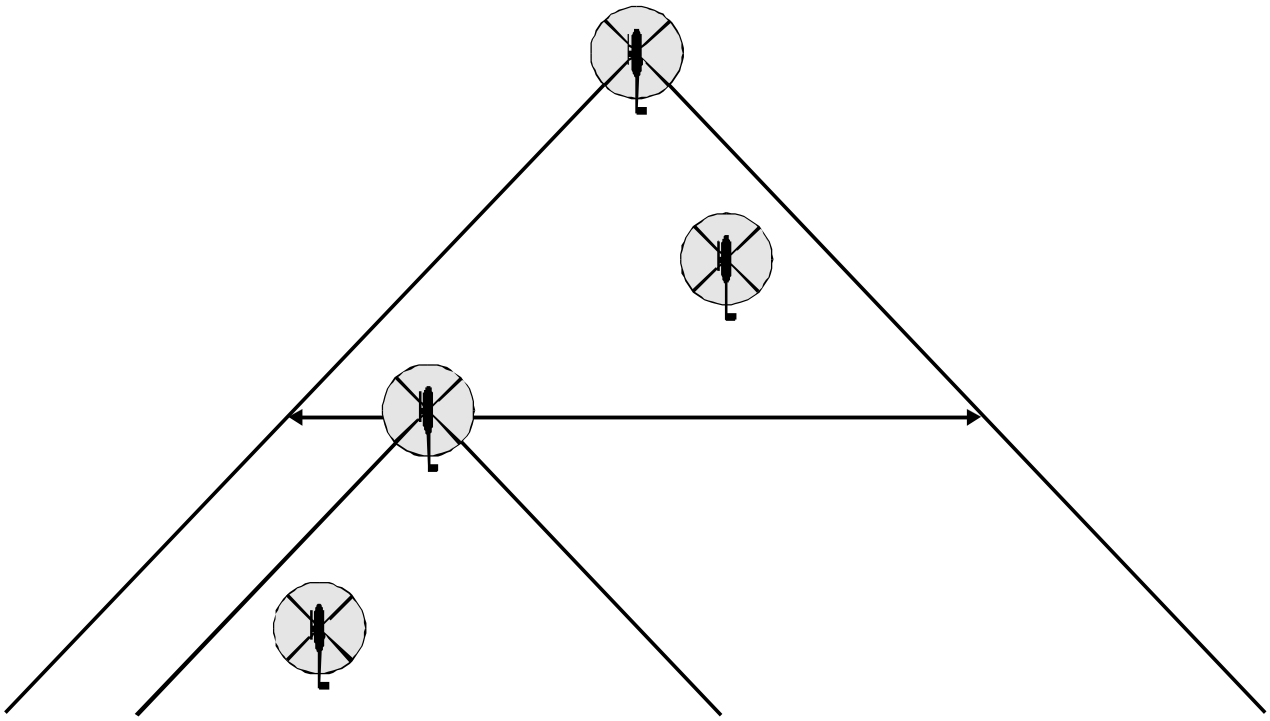

Figure 6-IV: Element in Trail Formation

(Element in Trail with the Section in Figure 6-III)

Transport Helicopter Tactical Formations

0614. **Basic Formation Configurations.** The primary purpose of Transport Helicopter (TH) formations is the movement of cargo and/or troops in support of helicopter-borne or airmobile operations. The basic building block of the tactical TH formation is the section. Large formations are normally formed by combining sections of aircraft, which may be structured into elements of two or more sections. As an example, two sections of aircraft are spaced in Battle formation at Figure 6-II, and two sections are spaced in Trail formation at Figure 6-IV. Note that the two basic formation types provide for different lateral and longitudinal disposition. The fundamental procedural difference between the two techniques is that in battle formation the second section will take reference off of the lead aircraft of the element, while in trail formation the second section positions itself laterally with reference to the element lead and longitudinally with reference to the wingman of the preceding section.

0615. **Planning Considerations.** The size and composition of the TH formation will be dependent on several factors which include:

a. The size of the lifted unit(s) and/or amount of cargo, the lift capacity and performance characteristics of the helicopters;

b. The ground tactical and/or landing plan of the lifted unit(s), the desired unit integrity, and the size and disposition of the LZs and PZs;

c. The weather, terrain, level of threat and/or the disposition of threat forces.

Large formations tend to become unwieldy and offer lucrative targets. Depending on the tactical situation, consideration may be given to using sections, elements, or a combination of the two in posturing a large formation. While the command of a large formation remains with the formation leader, elements and/or sections of the formation may be given considerable freedom of action while executing their functions. To this end, sections and/or elements could be allocated separate routings, LZs, PZs, and timings to maintain procedural separation within the formation.

0616. **Responsibilities.** The formation leader of a TH formation will have responsibility for the following:

a. Planning and briefing the formation on all aspects and phases of the mission (formation briefing points outlined at Annex 6B);

b. Manoeuvring the formation to ensure the optimum use of mutual support between sections and/or elements;

c. Manoeuvring the formation during the staging, loading and landing phases of the operation, in keeping with the ground tactical plan of the lifted unit;

d. Manoeuvring the formation during the air movement phase of the mission;

e. Determining the defensive manoeuvre plan for the formation, to include rejoin procedures and/or recovery procedures for encountering inadvertent IMC;

f. Determining the communications procedures and plan for the formation; and

g. Co-ordinating, planning and integrating the use of support and/or escorting aircraft for the formation.

Armed/Attack Helicopter Escort to Formations

0617. **General.** TH formations may be escorted in high threat environments by Armed/Attack (AH), to provide defensive and/or offensive fire support to the TH formation during transit and/or provide suppressive fire support and reconnaissance of the landing zones or area.

0618. **Escort Techniques.** There are two main techniques for providing AH support to the TH formation - the attached and detached escort. Both techniques are described below:

a. **Attached Escort.** The attached escort is appropriate if support is required for the entire route. AH assigned as attached escort to a TH formation may fly as part of the formation or as independent sections or elements alongside the formation. In any case, the AH must retain the capability to break away from the formation or change position within the formation, to engage targets or provide the desired fire support, without adversely affecting the integrity of the escorted TH formation. The attached escorts should be positioned to provide support to the whole TH formation and should ideally be capable of engaging an aggressor before the TH are within the threat's weapons range.

b. **Detached Escort.** Detached escorts may be appropriate to provide cover from fixed threats which affect only part of the TH formation's route. AH may fly ahead to clear the route (sweep escort), rendezvous with the TH to give cover at key points, or provide a shuttle escort between key points.

0619. **Landing Site Security Operations.** TH formations are most vulnerable during Landing Site (LS) approach and departures. AH security operations at the LS may include the reconnaissance of the landing sites prior to the arrival of the TH formation to determine if there is any threat to the TH and, if required, the suppression of a threat to the security of the LS. AH stand-off patterns and heights should ensure safe deconfliction with friendly aircraft while allowing the AH freedom

to engage ground or air threats effectively. Patterns will be determined by the level of threat, the landing area/zone/site characteristics, and AH weapons capabilities. Specific tactical techniques could include an orbit of the LS, a racetrack offset from the LS or the use of concealed fire positions.

Night Formation

0620. Night formation may be flown using either unaided-eye procedures, or electro-optical (EO) night vision devices (NVDs) such as night vision goggles (NVGs) or Thermal Imaging (TI) equipment. In comparison to day formation operations, operations at night require more time to complete. Equipment limitations and reduced visual acuity generally limit manoeuvrability and require the use of reduced airspeeds and higher altitudes to maintain obstacle clearances. In addition, the restrictions in lighting will result in an increase in the time needed to position and manoeuvre, load, unload, service, refuel and/or re-arm aircraft. The following planning considerations take on added significance during night operations:

a. De-conflicting formation traffic, with particular emphasis on procedural separation of elements which cannot or may not be capable of maintaining visual contact with preceding elements. Specifically:

(1) The designation of checkpoints, flight routings, altitude assignments, direction of traffic flow, and/or the establishment of flight corridors;

(2) Strict adherence to timings;

(3) Accurate navigation.

b. The planning and control of aircraft movement for the staging, loading and landing phases of the mission, as well as the marking of load points and identification of loads and/or the lifted unit(s);

c. Co-ordinating formation operations with the ground forces' illumination plan, determining the light discipline for the lifted unit and the formation;

d. Co-ordinating with the Air Defence Authority and the Airspace Control Authority to determine identification procedures for the formation and de-conflicting with other airspace users;

e. The communication plan for the formation;

f. Procedures for lost lead, re-join, inadvertent IMC and emergency recovery; and

g. The selection of route and limiting turns/route changes to less than 90 degrees.

0621. **Unaided-Eye Night Formation.** Unaided-eye night formations should normally be flown in trail, with appropriate distance between successive sections. Formation positions are maintained by reference to aircraft navigation or formation lights, and the leader's outline against the sky. Such formations must be carefully planned, taking into account the threat, terrain, weather, and ambient light levels. In comparison to formations operating with NVDs, unaided-eye formations are less manoeuvrable, are adversely affected by poor weather, require higher altitudes for obstacle avoidance and the use of landing lights or visual approach aids at the LS. Generally, the unaided-eye night formation would be limited to missions conducted in secure areas with minimal threat of engagement.

0622. **EO NVD-aided Night Formation.** EO NVD aided operations greatly increase the night operational capabilities and offer major tactical advantages over unaided operations in a hostile environment. However, they do not entirely compensate for the limitations and restrictions of night flight operations due to the degradation of visual acuity, lack of depth perception, the reduction of visual cues, narrow field of view, monochrome display and the difficulties in perceiving relative motion. Although it is possible to conduct missions with a mixture of aircraft operating with and without NVDs, it is general practice not to employ aided and unaided elements and/or sections within the same formation.

0623. **EO NVD-aided Formation Types and Techniques.** EO NVD formations are normally flown in trail. Tighter formations are generally required for operations conducted in lower light levels. Airborne join-ups or re-joins require careful co-ordination and are generally time consuming, and hazardous under low light conditions. Join-up or re-join on the ground at a predetermined location may often be more tactically sound and economical on fuel.

Control of Formations

0624. **Multinational Operational Considerations.** Planning and control of multinational operations must take account of the differences in helicopter performance, equipment fits, national Standard Operating Procedures (SOP) and the degree of combined training undertaken before the operation. If crews have not completed combined training, helicopters of different nations should not be mixed within formation elements. Instead, mission planners should seek to exploit national strengths or equipment fits and allocate different national units to specific tasks or phases of the formations mission. Alternatively the formation should be postured in national elements within the formation.

0625. **Formation Leader Responsibilities.** The formation leader commands the formation and is responsible for the conduct of the formation's operations in executing the mission. The leader controls the planning for the mission, and his briefing must include the aspects listed in the various sections of this chapter

pertaining to operations as well as those items listed at Annex 6C. Leaders of formations comprised of multinational forces or units which are located at dispersed locations will need reliable and secure ground-to-ground communications to complete all aspects of mission planning and briefing.

0626. **Section and Element Leader Responsibilities.** Section and Element leaders will be responsible for fulfilling the tasks assigned to them by the formation leader. They will be primarily responsible for the navigation and manoeuvring of their section or element in keeping with the formation leader's tactical plan and orders for the mission.

0627. **Wingman Responsibilities**. Within a tactical formation each crew remains responsible for the safe flight path of their aircraft, including altitude and obstacle clearance. In maintaining their tactical position, each wingman contributes to the mutual support and the tactical integrity of the formation. Each wingman must be prepared to take over the lead of his section or element at any time. Consequently, they must remain fully aware of the formation's mission assignments and the tactical situation.

0628. **Crew Briefings.** While it is desirable to brief all of the crews of the formation together, this may not be possible in all circumstances. When situations arise that preclude briefing all of the crews, the formation leader is responsible for ensuring that the key crews, section and/or element leaders are thoroughly briefed on all facets of the planned mission. In all cases, adequate time must be allowed for section and/or element leaders to brief their aircrew on their tasks and plans for their assignments within the formation.

0629. **Numbering of Aircraft**. Aircraft within formations are numbered starting with the lead aircraft and numbering progressively from front to rear. The entire formation may be given a call sign with designated numbers describing individual aircraft positions within the formation. To allow for more detailed assignments or simplify the numbering of larger formations, colour codes may be given to the sections and/or elements of the formation: i.e. Given a formation of 12 TH assigned the Formation call sign of Panther; the formation leader may divide the formation into three Elements of four aircraft with colour codes Blue, Green and Black; each of the aircraft within the three elements are designated in sequence as Lead, 2, 3 and 4; e.g. Panther/Green/3 would be the third aircraft of the second element of the formation.

0630. **Formation Manoeuvres**. There are many factors which have to be taken into consideration in planning and executing the manoeuvres of a tactical formation. One of the more important considerations being the retention of the formation's tactical integrity. As previously discussed, the type of formation best suited to the mission will be determined by operational factors and the formation leader will have

to plan the appropriate tactics and manoeuvring of the formation. Due to the relatively limited airspeed margins available to helicopters, the routing and

manoeuvring of the formation must be given careful consideration during the planning process. During the mission, all wingmen, sections and/or elements are responsible for anticipating and executing the manoeuvres required to maintain the desired tactical position within the formation. In general, the difficulties in manoeuvring increase with larger turns and/or larger formations. General considerations for manoeuvring a formation in trail or battle formation are outlined below:

a. **Trail.** In trail, the wingman, section or element has the freedom to manoeuvre to maintain tactical position within the formation and/or the desired flight profile. For large turns, or unplanned changes in route, the wingman, section or element may move through the lead's six o'clock during turns to avoid excessive power or speed changes.

b. **Battle.** The turning techniques used in this formation technique vary with the change of heading required and the terrain being overflown. Crossover turns in battle formation are pre-planned manoeuvres which require little changes in airspeed but result in the follow-on wingman, section or element changing sides with lead. Depending on the direction of the turn, the aircraft, section or element on the outside of the turn would be the first to execute the turn, with the aircraft, section or element on the inside of the turn continuing on until they are in a position to turn to the new heading or track and resume station in battle formation. In comparison, the option of conducting a "wheeled" turn, with the wingman, sections and/or elements maintaining the same stations within the formation, could be used for lesser turns. However, this type of manoeuvre would either require the aircraft on the inside of the turn to slow down or the aircraft on the outside of the turn to speed up, or a combination of both. In general, these speed variations would become more of a consideration with larger turns and/or larger formations.

0631. **Effects of Bad Weather.** In tactical situations, bad weather can be used to advantage as a obscuring factor in providing cover and concealment of formation operations. However, given that the manoeuvrability of formations is generally more restrictive than single aircraft operations, the effects of adverse weather must be carefully considered in the planning and execution of the tactical helicopter formation operations. Contingency plans for alternate routes, abort criteria and procedures, inadvertent IMC emergency and recovery procedures, rendezvous and re-join locations and lost wingman procedures must all be planned, briefed and understood prior to commencing the mission.

ANNEX 6A - FORMATION TERMINOLOGY AND DESCRIPTIONS

6A1. The terminology and descriptions contained in this Annex do not account for all of the terms used by nations to describe helicopter formation operations. This Annex is intended to provide clarification on terms which are, or may, be used to describe certain aspects of formation tactics, techniques and procedures.

6A2. **Column or Line Astern Formation.** A formation of aircraft flying in positions directly behind the lead aircraft. This is generally a close formation technique.

6A3. **Crossover.** The generic term used to describe the movement of the wingman, section and/or element as it passes laterally and to the rear of the lead helicopter, preceding section and/or element within the formation, during changes in position.

6A4. **Echelon Formation.** A formation of aircraft where succeeding aircraft fly 45 degrees off the aircraft in front. All aircraft are positioned on the same side of the formation, i.e. Echelon Right - all aircraft fly echelon to the right of lead; Echelon Left - all aircraft fly echelon to the left of lead. This is generally a close formation technique.

6A5. **Flight Profiles.** The tactical flight profile of the formation describes the general altitude above ground and speed of the formation. Depending on the task, threat, weather, light conditions and other factors affecting the tactics employed by the formation leader, there may be one or more flight profiles used during the course of any one mission.

6A6. **Horizontal Spacing.** The horizontal spacing between aircraft, sections and/or elements within a formation and may be described as:

a. **Close.** Normally two rotor disc diameters of the largest rotor span in the element measured between tip-path planes between aircraft;

b. **Loose.** Normally three to five rotor disc diameters between aircraft, sections and/or elements of the formation; and

c. **Extended.** The distance between aircraft, sections and/or elements of the formation is greater than five rotor disc diameters and as defined by the formation leader in accordance with tactical requirements.

6A7. **Join-up.** The bringing together of helicopters to establish a specific flight formation.

6A8. **Rendezvous.** A prearranged meeting at a given time and place from which to begin an action or phase of an operation or a place to which to return after an operation is completed to reassemble.

6A9. **Staggered Left or Staggered Right.** A tactical formation in which it is desirable to fly favouring the left or right of the lead but maintaining the freedom of manoeuvre within the formation. This generally applies to tactical Trail formations.

6A10. **Vertical Separation.** The vertical separation between aircraft, sections and/or elements within a formation and may be described as:

a. **Flat Separation.** No specific altitude assignments and all aircraft within the formation fly at generally the same altitude;

b. **Stepped-up Separation.** The altitude of the succeeding aircraft within the formation is higher than the preceding aircraft, with lead having the lowest altitude; and

c. **Stepped-down Separation.** The altitude of the succeeding aircraft within the formation is lower than the preceding aircraft, with lead having the highest altitude.

ANNEX 6B - RELATIVE ADVANTAGES - FORMATION TYPES

ADVANTAGES	DISADVANTAGES
Battle 1. Wingmen have time for navigation and lookout. 2. Helicopters can fly low, yet maintain good lookout. 3. Threat presented with a broad frontage, with little depth which offers shorter engagement time for ground threats. 4. Less predictable flight path for sections or elements of the formation. 5. Risk of collision during hard manoeuvres is low. 6. Provides optimum mutual support.	1. Large heading changes are complex. 2. Unplanned manoeuvres normally require verbal communication to coordinate. 3. Narrow routes or corridors may be difficult to negotiate. 4. Visual contact may be difficult to maintain in hilly terrain, adverse weather, or at night. 5. Inappropriate for slow helicopters, or helicopters with under slung loads (USLs). 6. Difficult for embeded/attached escorts to defend all elements.
Trail 1. Can route close to obstructions and around known threat defences. 2. Simple to coordinate with escorts. 3. Formation integrity more easily maintained in poor visibility, adverse weather, and/or night conditions or in hilly terrain. 4. Threat areas crossed on a narrow front. 5. Unplanned manoeuvres are more easily accomplished without verbal communications.	1. Acquisition from ground or air made easier by closer spacing and a more predictable flight path. 2. Concentration on manoeuvring within the formation may degrade lookout in turns or during manoeuvres. 3. Close formation particularly risky because of the large IR signature, restrictions to manoeuvrability, and risk of collateral damage within the formation from threat weapons. 4. Poor mutual support.

ANNEX 6C - FORMATION BRIEFING CONSIDERATIONS

6C1. Formation leaders must cover the following factors when briefing the formation:

a. Formation numbering and call signs;

b. Deputy leader, and leadership chain of command as well as lead change procedures;

c. The tactical manoeuvre plan for the formation including the staging or form-up, loading, air movement/routing and landing plans, along with detailed timings for all phases of the mission;

d. Formation type and spacing, including departure, arrival, and landing procedures, and formation changes en route;

e. Air speeds and altitudes (flight profiles);

f. Mutual support and plan for defensive fire within the formation and the actions in event of encountering threat aircraft and/or ground fire, ESM indications and unserviceabilities;

g. Adverse weather plan, break-up and recovery procedures;

h. Rendezvous or re-join procedures and locations;

i. Downed aircraft procedures and SAR plan;

j. Refuelling plan;

k. The co-ordination plan for air space control, artillery fire and escorts;

l. ROE;

m. Visual signals, code-words, executive commands for evasive manoeuvres, communications procedures and EMCON policy.

6C2. Leaders of night formations must cover the following additional factors:

a. Ground lighting configurations at departure, loading areas, and landing sites;

b. Aircraft lighting configurations for departure, en route, landing and rejoining the formation;

c. Types of EO NVDs and equipment to be used and any potential compatibility problems;

d. Join-up and re-join procedures.

6C3. If the formation is operating in a hostile or threat environment and/or includes the use of escort aircraft, the formation leader must ensure that the aircrew are familiar with:

a. Intelligence, including threat locations, capabilities and support assets;

b. Terrain for primary and alternate routes, including LS;

c. Communications plans, EMCON policy, and codewords;

d. ECM plan, including use of defensive measures;

e. Escort patterns and areas in which escort is required;

f. Actions following engagement, including threat reporting, ROE, AH tactics, TH manoeuvres, scatter plan and RVs.

CHAPTER 7 - HELICOPTER ANTI-ARMOUR PROCEDURES

This chapter provides technical details for the use of helicopters in the anti-armour role.

ANNEX 7A - RECOMMENDED LIAISON CHECKLIST FOR HELICOPTER UNITS EMPLOYED IN THE ANTI-ARMOUR ROLE[1]

7A1. **Enemy Situation:**

a. Order of battle information. (To include locations, strengths, and direction of movement.)

b. Probable courses of action.

c. Air defence capabilities and air threat including helicopters.

d. Avenues of approach.

7A2. **Friendly Situation:**

a. Last known positions of all units.

b. Planned manoeuvres of all units.

c. Frequencies and call signs.

d. Artillery fire plan, to include fire control measures (FCM).

e. Availability of close air support (CAS).

f. Obstacle and minefield plan.

g. Air defence weapon employment and engagement rules.

h. Airspace control measure.

7A3. **Helicopter Employment:**

a. Missions.

b. Co-ordination with ground forces.

[1] Information on helicopter locations and additional co-ordination features must be provided to the ground force commander. The helicopter unit commander or his designated representative should make initial liaison with the ground force commander.

7A4. **Miscellaneous:**

a. Maps and charts.

b. Co-ordination of subordinate units' callsigns and radio frequencies.

c. Ground security requirements.

d. Required reports.

e. Logistic support as required.

f. Actual and forecast weather, to include illumination level for night operations.

ANNEX 7B - MISSION BRIEFING

A mission brief for a helicopter anti-armour operation should cover the following subjects.

7B1. **Situation:**

a. **Enemy Forces:**

(1) Situation.

(2) Air defence artillery capabilities and air threat including helicopters.

(3) Last reported enemy locations and direction of movement.

(4) Probable course of action.

b. **Friendly Forces:**

(1) Identity of ground forces.

(2) Forward lines of own troops.

(3) Planned close air support.

(4) Air defences and airspace control.

7B2. **Mission:** (reconnaissance, screen, covering force, reaction force, raid, etc).

7B3. **Execution:**

a. **Concept of Operation:**

(1) Scheme of manoeuvre.

(2) Fire support.

(3) Control measures.

b.) **Tasks** (given for each unit).
)
c.)
)
d.)

e. **Co-ordinating Instructions.**

7B4. **Service Support:**

a. **Supply:**

(1) Class I.

(2) Class III and V locations and pick-up instructions.

7B5. **Command and Signal:**

a. Frequencies and callsigns.

b. Code and passwords.

c. Rendezvous points for major and subordinate units.

d. Radio discipline requirements.

7B6. **Miscellaneous:**

a. Sunrise/sunset time, moonrise time and illumination level.

b. Actual and forecast weather (including wind direction and speed).

c. IFF/SIF codes.

ANNEX 7C - TARGET UPDATE BRIEFING[1]

Subject		Example
1. **Identification.** Callsign of originator.		'YQ36X this is AC42P'.
2. **Target, Location & Activity.** Description, position, activity and time of report.		'10 tanks at GR123456 moving south along and astride autobahn at 0830Z'.
3. **Other Enemy Activity.** Location, description and activity of other known or suspected enemy forces that may affect engagement.		'At GR113456, enemy reconnaissance elements reported moving south at 0800Z'.
4. **Own Troops.** Location, descriptions and activity of friendly forces in area.		'At battle position 4, two tank platoons defending'.
5. **Fire Support.** Planned artillery fire support and/or callsign and frequency of supporting artillery element.		'AC42Z will adjust fires for engagement. Contact on this frequency'.
6. **Co-ordinating Instructions:** a. Timing of engagement.		'When positioned, report. Recommend battle position 18. Attack when ready'.
b. Recommended battle positions and direction of attack.		
c. Actions after engagement.		
d. Subordinate frequencies and call signs.		

[1] If required, can be passed by radio from friendly force in contact with enemy target.

ANNEX 7D - EXAMPLE OF TARGET HANDOVER (OBSERVATION HELICOPTER TO ANTI-TANK GUIDED MISSILE ANTI-ARMOUR HELICOPTER) [1]

1.	**Compulsory:**		**Example**
	a. **Alert and Target Description.** Alerts anti-armour helicopter, and identifies the sender, describes the target(s) type, number, and activity.		'ZK13A - this is ZK06A; estimated tank company moving west; two ZSU 23-4s to rear of company'.
	b. **Target Location.** The location may be described either:		
	(1) By UTM Grid Co-ordinates, or		'Naiderville (square LB 6235)'. or
	(2) By Polar Co-ordinates, i.e. giving the distance and direction from a simple reference point [2].		'Cross-roads two miles west of Church Tower'.
2.	**If Applicable:**		
	a. **Method of Attack.** A concise description of the planned scheme of fires and manoeuvre for the attack.		'On my command, attack with two missiles from position 1, move to position 6, re-engage on order' or 'engage when ready'.
	b. **Execution.** Initiates attack.		'Unmask' or 'attack'.

[1] The executive roles of the Observation Helicopter and the Armed Helicopter vary between nations. In the event of a multi-national mission this point must be covered in the briefing. See Annexes 7B and 7C.
[2] Target location may also be designated through the use of artillery rounds or by laser locator/designator equipment.

ANNEX 7E - EXAMPLE OF TARGET HANDOVER WITH REMOTE TARGET DESIGNATION (VOICE)

PRE-LAUNCH

Procedure		**Description**
Laser Designator Operator (LDO) to Attack Helicopter Crew (AHC).		
Alert.		
Upon hearing the codeword 'Remote' the AC is alert to a remote laser designated mission.		Example: 'B29, this is B62 Remote'.
Target Local Plus Firing Angle.		**Three Options:**
The AHC needs the laser-to-target line (LTL) to determine the separation angle between the LDO and the AHC.		1. Pre-planned target and LTL stored in the fire control computer. ('Target 1, 350 degrees').
		2. State target grid and LTL. ('Grid XY123456, 350 degrees'.)
		3. State engagement area and LTL. ('EA Fox, 350 degrees'.)
Firing Method, if Applicable.		Assume indirect unless direct is stated.
Firing Mode, if Applicable.		Assume single unless 'rapid' or 'ripple' is stated. Assume lock-on after launch unless lock-on before launch is stated.
Number of Rounds, if Applicable.		Assume 'one round' unless stated otherwise.
Laser Code.		Depending on the firing mode, one or 2 codes will be required. ('Code A'.)
Time Between Missions, if Applicable.		Assume '10 seconds' unless stated otherwise.
Execution.		Always 'at my command' unless stated otherwise.

LAUNCH

AHC to LDO		LDO TO AHC
1. 'Ready Over'. Lets the LO know that the AHC is in position and ready.		On receipt of a 'Ready' call - 'Fire'. 'Over'.
2. 'Shot'. 'Over'.		'Shot'. 'Over'. On receipt of this call, the LDO lases the target at the appropriate time.

NOTES:

1. The LDO may request the AHC to send the command 'Laser On' if the LDO has not computed missile time-of-flight or offset lasing. Lasing will continue until missile impact or 20 seconds beyond expected missile time-on-target. The laser will be turned off any time a 'laser off' call is received.

2. The above procedure assumes the AHC is within missile launch constraints.

CHAPTER 8 – JOINT AIR ATTACK TEAM OPERATIONAL PROCEDURES

0801. **Introduction**. The aim of this Chapter is to identify how the air elements of a Joint Air Attack Team (JAAT) integrate with the all-arms action on the surface.

0802. **Planning Considerations**. The following considerations need to be taken into account when planning a JAAT operation:

a. **Mission**.

- Intent
- Concept of operations
- Purpose of JAAT within framework of ops
- Future intentions

b. **Target Area of Interest**.

- Location of engagement area
- Avenues of approach
- Type and size of target
- Target activity and defences
- Target priorities
- Alternative targets/contingency plans

c. **JAAT Elements**.

(1) **Ground Forces**.

- Location and future intentions
- Integration of JAAT into manoeuvre plan
- Fire Control Measures
- Ground to air fratricide
- Support assets available

(2) **Armed/Attack Helicopters (AH)**.

- AH available for operations
- Weapon load/configuration
- Location of Forward Arming and Refuelling Points
- Tactics and attack options
- Fire Support Officer (FSO)/Airborne FAC (ABFAC) assets available

(3) **Fixed Wing**.

- FW available for operations
- Tactics and attack options
- Weapon load/configuration
- FAC arrangements
- Contact Points (CP)
- Laser Codes
- Authentication

(4) **Artillery**.

- Artillery assets available to support JAAT operations
- Location of artillery
- FSO assets available

d. **Suppression of Enemy Air Defences**.

- Disruptive
  - EW assets available
- Destructive
  - In place ground forces
  - Artillery
  - AH
  - FW

e. **Control Measures**.

- AD/Airspace Control
  - Friendly AD assets in area of JAAT ops
  - Airspace Control Order (ACO)
  - Routing
  - Airspace Control Measures (ATP-40)
  - AD Weapon Control States
- Weapon fragmentation
- Weapon trajectory

f. **Communications**.

- Communication Plan
- EMCON
- Controlling HQ
- Manoeuvre Force Commander (MFC)
- JAAT Mission Commander
- Frequencies

- IFF
- Lost Communications procedures
- Rebroadcast requirements

0803. **Conduct of Operations**. After receiving the mission, AH elements will conduct mission analysis in as much detail as time allows, deciding which method of employment and type of attack should be used by the JAAT element. Planning, co-ordinating, analysing, and rehearsing are the key to a successful mission.

a. During the approach phase, reconnaissance is a vital interest for a JAAT operation. It should include:

- battle positions,
- avenues of approach,
- obstacles,
- enemy air defence systems,
- potential engagement areas (if not already identified).

b. Surveillance and Target Acquisition (STA) assets (e.g. air observer, Unmanned Air Vehicles (UAVs)) should establish contact with the unit providing indirect fire support during reconnaissance. This contact should continue throughout the mission. Careful consideration should be given to the use of artillery prior to direct fire engagements with AH and FW. Obscurants generated by the impacting rounds may interfere with laser range finders and designators, degrading the effectiveness of precision guided munitions.

c. The JAAT Mission Commander will sequence all assets into the battle in accordance with the plan to achieve the desired effect.

d. When the FW assets arrive at the CP the FW leader must check in with the JAAT Mission Commander, FAC or other nominated agency. Mission information passed by rear briefing agencies before the aircraft arrive in the target area can facilitate air operations and speed up check in and briefing; for further details see ATP-63. Ideally, the JAAT Mission Commander, the AH, the FAC and the FW element should be on the same frequency. As a minimum, the JAAT Mission Commander, the FAC and the FW leader must be on the same frequency. The JAAT Mission Commander must have direct communications with the FSO/FSC.

e. The FW aircraft are directed by the JAAT Mission Commander or the FAC. If the AH and FW aircraft are equipped with lasers and laser designation devices, they can mark targets, the centre mass of the target array, and boundaries of the sector or designate targets for the laser-guided munitions. The use of laser can increase the speed and safety of the attack and may

reduce the amount of communications necessary between the AH, the FAC and FW. Laser procedures for CAS are detailed in ATP-63.

f. Sequencing of JAAT elements is the responsibility of the JAAT Mission Commander. Two possible sequencing methods are illustrated at Annex A.

0804. **Communications**. Communications are critical for the execution of JAAT operations. The need for short, concise transmissions and the use of standardised terminology is imperative. ATP-63 lists standard terms and brevity words for control of CAS. A comprehensive list of brevity word is in APP-7, Joint Publication Brevity Words. Methods of warning other aircraft of enemy fighter attacks are detailed in STANAG 3275.

ANNEX 8A - JOINT AIR ATTACK TEAM SEQUENCING

8A1. A well-orchestrated JAAT operation would normally require a number of radio calls to ensure its success. In order to reduce radio traffic to a minimum, a pre-planned method of co-ordinating JAAT activities can be used. These vary between nations; however, two examples are:

a. **The JAAT Sequence Card**. The JAAT Sequence Card consists of a number of different attack sequences (see Figure 8A-1), and would be issued to all those likely to be involved in a JAAT operation. The option to be used for any specific attack would be broadcast by the JAAT Mission Commander giving a letter code, a number and an H-Hour. The letter code refers to the type of attack and the number to the length of time of the first attack interval. For example, if the JAAT Mission Commander orders 'KILO 3 at 1232 hours', the attack will begin at 1232 hours, with an artillery bombardment for 3 minutes followed at 1235 (1232 hours + 3 minutes) by AH and FW at 1237. The artillery then engages at 1239 until given 'check firing' by the artillery observer. From the single call, all JAAT elements can work out their involvement and plan accordingly. The format of the card is variable and can be constructed or amended to meet different situations as required.

H HOUR	[ ] min	2 min	3 min	"CHECK FIRE"	
K	ARTY	AH	FW	ARTY	
I	ARTY	FW	AH	ARTY	
J	ARTY	AH	ARTY	FW	ARTY
N	ARTY	AH	ARTY		
M	ARTY	FW	ARTY		
R	AH	FW			
T	FW	AH			

Figure 8A-I: JAAT Sequence Card

b. **The JAAT Clock**. The JAAT Clock is used by the US to control JAAT operations. It is a method of sequencing the JAAT engagement based on time. The operation begins with a start time and each element of the JAAT receives a time interval to engage the target. Once the attack start time and the order of engagement have been established, further radio transmissions should be unnecessary. In Figure 8A-2, the sequential operation begins at time 0. The artillery will fire from 0 to 1 minute. At 0 plus 1, the FW assets attack the target and must complete their attack and exit the area by 0 plus 2. FW is followed by AH and so on. If a re-attack is required, the sequence will begin again at 0 plus 3 minutes. The advantage of this system is that it is relatively immune to communications jamming; the disadvantage is the inability to react to unforeseen actions, which makes the system very inflexible.

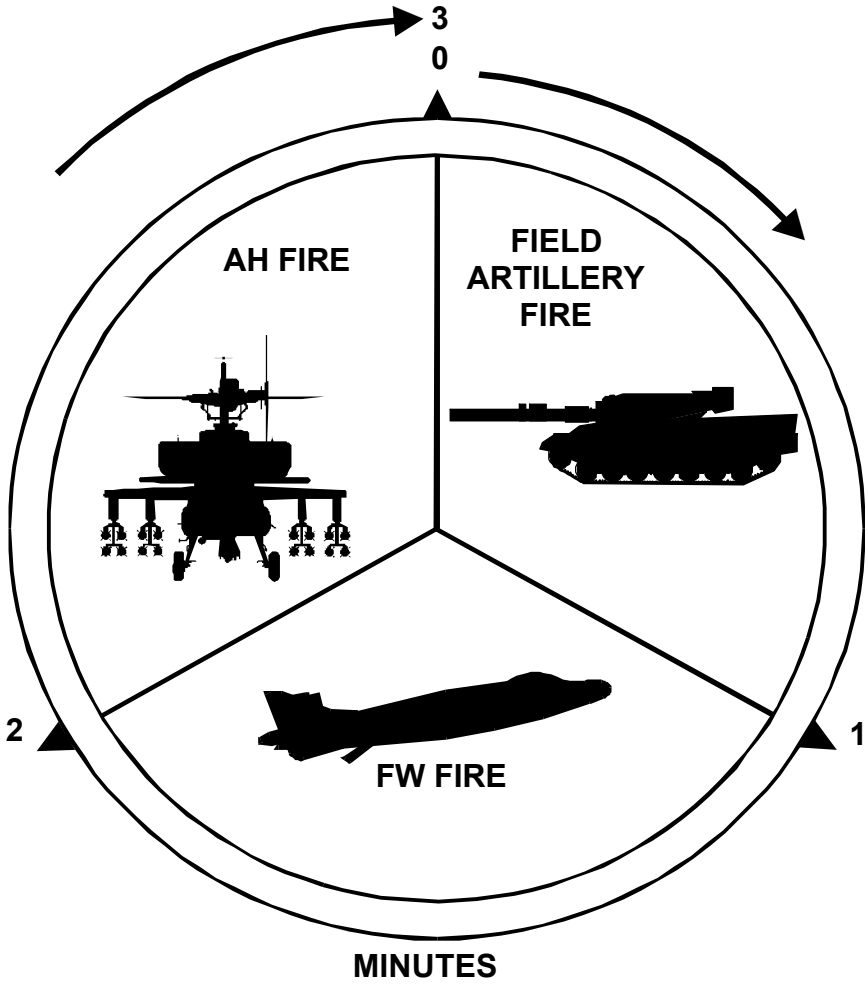

Figure 8A-2: JAAT Clock

CHAPTER 9 - PLANNING AND EXECUTION OF ARMED/ATTACK OPERATIONS

Related Publications:

ATP-42 Counter Air Operations.
ATP-27 Air Interdiction and Close Air Support.

0901. **Aim.** The aim of this chapter is to describe the structures and procedures required for the planning and execution of Armed/Attack (AH) operations.

0902. **Formation Structures to Support AH Operations Planning.** The structures at Corps, Division and Brigade level differ across the NATO nations. However, the following staffs will be required at formation headquarters to support AH operations:

a. **G2 Staffs.** G2 Staff are required to collate and analyse the specific type of intelligence required for deep AH operations. G2 will be required to produce details of the following:

(1) Enemy concentrations, especially armoured formations

(2) Air Defence (AD) weapon systems.

(3) Radars (including AEW radars).

(4) Target analysis to assist in weapon selection (e.g. armour or infantry heavy will dictate missiles or rockets).

(5) Continually updating the Intelligence Preparation of the Battlefield (IPB) on the target and tracking the target.

(6) Terrain and weather analysis.

b. **G3 Staffs.** G3 Staff are required to:

(1) Conduct mission analysis, estimate, and risk assessment.

(2) Blend air manoeuvre with the ground manoeuvre into the formation commanders scheme of manoeuvre.

(3) Co-ordinate ground and AH manoeuvre in the deep battle area for example with long range reconnaissance assets.

(4) Deconflict with ground based units during the egress and ingress

phases of the operation across the close battle Forward Edge of the Battle Area (FEBA).

(5) Coordinate the support for any AH operation assisted by specialist LOs, EW, Communications, artillery, aviation and air staffs.

(6) Allocate of real estate to AH units.

(7) Coordinate EW.

(8) Provide Liaison Officers.

(9) Allocate communications.

c. **Artillery/Air Defence staffs.**

(1) Synchronise deep fire plan with support to the AH deep operation.

(2) Provide assistance with Command and Control.

d. **Aviation staffs.** These might be incorporated as core G3 functions, e.g. in an aviation brigade, rather than specialist staff requirements.

(1) Plan and co-ordinate AH mission with other staffs.

(2) Co-ordinate timings and combat support for the mission.

(3) Nominate Joint Air-Assault Team Officer (JAATO), Forward Air Controller (FAC) and Area of Probability (AOP) controllers.

(4) Co-ordinate IFF codes with Artillery/Air Defence/ Air staffs / in conjunction with the Interim Combined Air Operations Centre (ICAOC)/Air Operations Coordination Centre (AOCC).

e. **Air staffs.** The following functions are conducted via the air chain of command i.e. through the ICAOC and its associated AOCC, Air Liaison Officer (ALO) and AD/Airspace Management staff.

(1) Synchronise all fixed wing support to AH operations including Suppression of Enemy Air Defences (SEAD) and EW.

(2) Co-ordinate laser codes with Air/Aviation staffs.

(3) Co-ordinate IFF codes with Artillery/Air Defence and Aviation staffs through main Air chain of command.

(4) Provide AD plan for protection of Forward Arming and Refuelling Points (FARPs).

f. **G4/G5 Staffs.**

(1) Conduct logistic mission analysis and estimate.

(2) AH operating bases will require approximately a minimum of 2 square kilometres to ensure aircraft dispersion, NBC holding areas and sufficient room for night operations.

0903. **Planning Deliberate AH Operations**. AH operations should be integral to the corps or divisional or brigade commanders overall scheme of manoeuvre and will normally take place at night. Normally, planning should start 72 hours before an operation. However, they require a minimum of 24 hours planning time to execute a deliberate deep raid. AH manoeuvre operations can also be planned and executed well within this timescale. Planning for AH deep operations must take place at formation level, normally by staffs dedicated to conducting the deep battle. As tasked by the manoeuvre commander (Corps, Div or Bde), the commander of the AH unit will have responsibility for executing the mission. There are 4 main planning stages intelligence preparation, creation of the target lists, formation and unit mission planning:

a. **Intelligence Preparation.** At corps, divisional and brigade levels preparation of intelligence is a continuous process within the G2G3 staffs. This process identifies targets and areas of interest while examining enemy positions and rates of movements eventually producing likely targets and missions for AH Units. These are then passed on to the G3 staffs involved in the deep battle. Further analysis includes obstacles such as wires and towers etc, and likely routes. Information on enemy AD systems is also required to select the applicable SEAD mission and to determine the best routes into, and out of, the deep battle area. This IPB process may require ISTAR assets to be retasked to support and cue the AH operation. Consideration is also required into post attack intelligence requirements for BDA.

b. **Deception.** Deception should always be considered as part of a deep operations plan. For example, deception can be used to attempt to illuminate AD radars prior to crossing the Forward Line of Own Troops (FLOT).

c. **Formation meetings/Target lists.** The formation deep battle staffs meet when required and focus in on the targets and missions in the next 24 to 48 hour period. Through analysis these targets become organised into the High Payoff Target Lists (HPTL) deemed to be critical to the commander's plan. Based on the staffs recommendation, the commander issues his guidance on the target to attack. The process is less specific for manoeuvre missions

since many of these will not discern discrete targets. A Warning Order is then sent to all participants.

d. **Formation planning.** The aim of this stage is to set up and conduct an intelligence collation plan in relation to the proposed mission. Ideally orders to the participating units are prepared by H-24. The intelligence staff develop a sensor matrix that matches sensors to the target and analyses projected routes. The orders by formation to unit to support an AH operation should include detailed information on enemy positions along the routes and in the target area and details of combat support for SEAD or combined and joint activity such as JAAT operations. Weather, route and terrain analysis, illumination and millilux light levels, infrared crossover, and missile environmental characteristics should also be examined and updated.

(1) **AH Raids.** For AH raids formation orders should also include a detailed plan co-ordinating the movement of the AH along the routes into and out of the deep battle area and detailed logistic planning. As a rule planning for AH operations is based on the principle of planning backwards from the time-on-target assessment.

(2) **AH Manoeuvre.** When AH are required to conduct manoeuvre missions, such as delay, pursue, meeting engagements etc, AH planning at formation level is identical to ground manoeuvre operations where an all arms scheme of manoeuvre including aviation, armour, artillery, engineers etc are combined. The principles of mission command, associated with battlefield control measures (e.g. report lines etc) apply.

e. **Unit Battle Procedure.** The aim of this stage is for units to conduct their own battle procedure. It will include time for regrouping with other arms, receipt of the formation (Corps, Division, Brigade) orders, unit preparation of intelligence and estimate, and unit orders to sub-units and logistic elements. It will also include guidance to sub-unit commanders on acceptable losses that can be sustained during the execution of the mission. Considerable liaison between units and formations will probably be required to co-ordinate the SEAD and joint or combined operations. AH units will normally require a minimum of 4 hours battle procedure, of which 2 hours needs to be in daylight.

f. **General Co-ordination.** Formation HQs are responsible for ensuring that general co-ordination with other agencies is carried out. Examples are:

(1) **Airspace Control Order.** The Airspace Control Authority should, if possible, be informed of the routes for inclusion on the Airspace Control Order (ACO). This may not be possible if the attack is planned within

the ACO cycle.

(2) **Weapon Control Orders.** Weapon Control Orders (WCO)s need to be issued to AD and all other units near the routes used by the AH units.

(3) **Laser Codes.** Laser codes for the Close Air Support aircraft must be co-ordinated with the AH when targets are to be marked by either ground based or Airborne Forward Air Controllers (AFAC)s.

(4) **Liaison Officers.** Effective passage of information is essential to the success of any AH mission or task. This is particularly necessary when AH Units are overflying other ground forces before and after a mission into the deep battle area.

(5) **Boundaries.** Boundaries indicate areas of operations (AO). In deep operations these are normally delineated by an engagement area, however if manoeuvre is to be used then an AO and battlefield control measures need to be created.

(6) **Counter Surveillance Control Measures.** All the elements of a formation or unit need not be on the same Counter Surveillance Control Measures (CSCM). The measures applied to AH units must take into account communications, IFF, radar altimeters, LTD/RF, ESM/ECM, direct and indirect weapons, and requirements for indirect fire support. When aviation is manoeuvring at night, using NVG or IR, commanders should consider imposing appropriate CSCM on adjacent units for the period of the operation.

(7) **Recovery.** The Commander should plan for the recovery of downed personnel and equipment.

0904. **Planning Hasty AH Operations.** The ability to plan and execute hasty AH operations is an essential requirement if the flexibility, mobility and capability of the AH to react to a manoeuvring enemy is to be realised. Hasty AH operations will be based on SOPs and procedures which allow the staffs to integrate AH operations with both land and air operations at short notice. The key areas which staff will need to ensure that co-ordination has occurred in are:

a. **Airspace Control.** The airspace control measures required have been passed to the Airspace Control Authority.

b. **AH Manoeuvre.** Aviation and other staffs must co-ordinate and plan a scheme of manoeuvre that integrates the AH operations into the overall all-arms scheme of manoeuvre and ensures that maximum effect is gained by the combined effects of all arms working together. It will be essential that the AH are operating to the same battlefield control measures, such as report

lines, etc, as the other ground forces.

c. **Liaison.** Liaison will be required to ensure deconfliction with other land and air operations.

Nevertheless, hasty AH operations will carry a greater level of risk, due to limitations in G2 support, difficulties in providing supporting forces and imprecise co-ordination.

0905. **Executing AH Operations.** The roles and missions for AH units are described in ATP-49(C), Volume 1. If manoeuvre missions are given to AH units staffs must ensure that orders include boundaries and limits of exploitation, ideally AH units should be given co-ordination measures in a similar way to ground manoeuvre units. The organisation and mix of AH to be employed on a deep operation depends on national capabilities set against the target or mission and of the enemy capabilities. Whilst executing AH operations the following should be considered:

a. **Synchronisation/Timings.** Essential to the success of a Cross-FLOT mission is the synchronisation of the AH movement with the execution of the supporting operations. In a pre-planned fireplan timings will be critical. In order to conform to exact crossing timings, Holding Areas, short of the FLOT, should be built into the move plan to allow AH units to loiter.

b. **Movement to the Operations Area.** AH units depart their operating bases and adopt tactical formations using the full width of the route. AH units will normally use designated flight routes (see ATP-40). Proper use of tactical formations will provide the best combinations of firepower, flight safety and survivability. Movement from operating bases to the route enables the squadron to shake out prior to entering hostile territory. Flight will normally be at low level. The following should be considered as the force deploys into the deep battle area:

(1) **Friendly Air Defence Measures.** Initially the route will be conducted over an area controlled by friendly forces who must be warned of AH movements with appropriate WCO status ordered. Before engagement of any unexpected encounter, positive identification will have to be obtained visually using visual targeting systems. IFF should be used in accordance with the ACO.

(2) **Enemy Air Defence Threat.** During movement, the major threat is from an unexpected attack by enemy air defence. If AH units are deployed beyond the FLOT encounters will be considered hostile and Rules of Engagement (ROE) must be briefed prior to the mission. On detection of an AD threat and if the decision is taken to destroy it, either the AH must use their own weapons to engage the system, or the aircrew must call for SEAD. If there is no threat to the mission, the position of the AD must be noted and passed to the commanding

headquarters.

(3) **Suppression of Enemy Air Defences.** During the move into the deep battle area, the plan may call for the use of SEAD. The SEAD plan can include either planned or on-call missions.

(4) **Holding Areas.** A number of holding areas should be planned along the route. These areas should be used as rally points in the event of an unplanned dispersion (e.g. from a surprise attack) or in order to conduct a tactical pause (e.g. to conform to the SEAD plan timings).

(5) **Combat Search and Rescue**. The detailed procedures for Combat Search and Rescue (CSAR) are described in ATP 62.

c. **Engaging the Enemy.** The tactics for the engagement of the enemy will depend largely on national equipment. These will determine decisions such as the range for engagement, engagement times, allocation of targets, type of targets and the size and position of battle positions (BPs). Some principles apply whatever type of AH is used:

(1) The time in BPs should be as short as possible.

(2) BPs should be dispersed. Such dispersions must not affect the ability of AH to provide mutual support and communications.

(3) Clear orders are required for target priorities and fire zones, including where appropriate no fire zones.

(4) When required, an element of the force is dedicated to an air defence overwatch role.

(5) If a JAAT mission is planned a JAAT Controller will be nominated. He will be responsible for integrating the JAAT mission into the scheme of manoeuvre of the AH or AH force.

d. **Return and Re-engagement**. After the engagement all AH return to a pre-designated rally point. Casualties are confirmed and if necessary an immediate combat rescue operation is initiated. The force moves to the start point of the return route and, if executing a deep operation the units initiates the SEAD plan, and moves down the route back across the FLOT. If a re-attack is planned the AH force is likely to replenish at a FARP, deployed as far forward as possible. The operation can be repeated using either the same or new routes, depending on the threat assessment.

e. **Battle Damage Assessment**. On return to the operating base or FARP the results of the mission should be analysed and post mission information sent to formation intelligence as soon as possible for Battle Damage Assessment (BDA) and re-attack consideration.

CHAPTER 10 – PLANNING AND EXECUTION OF AIRMOBILE OPERATIONS

SECTION I - PLANNING

1001. **General.** The basis of a successful airmobile operation is detailed planning. The requirement for an airmobile force to be able to respond rapidly to exploit a situation will, however, often compress the time available for planning. Operations should be based on fully developed special operating procedures (SOPs) reinforced by regular practise. Contingency plans should be developed for a range of options to reduce reaction and dispense with the need to develop complex written plans and orders at short notice. Elements of such plans can be implemented on an individual basis by, for example, placing formations or units on alert, setting up Mobile Air Operations Teams (MAOTs)/Tactical Air Control parties (TACPs), Forward Arming and Refuelling Points (FARPs), inserting reconnaissance and tactical control teams, establishing navigation and approach aids, and preparing airspace control means requests (ACMREQ). Nevertheless the planning time for complex airmobile operations will often be governed by the time needed to co-ordinate supporting operations and to gain access to Theatre level assets.

1002. **Planning Sequence.** The commander ordering an airmobile operation must have the authority to assign or attach the necessary ground and aviation elements to fully constitute the airmobile force. His headquarters will initiate the planning process and may retain responsibility for co-ordinating such aspects as intelligence, psychological and deception operations, Joint Suppression of Enemy Air Defences (JSEAD), Close Air Support/Combat Air Patrol (CASCAP), Combat Search and Rescue (CSAR) and the employment of special forces throughout the operation. It will also assist with processing fire support and forwarding ACMREQ. At an early stage the directing headquarters will issue a planning directive which will allow all organisations involved with the operation to begin detailed planning. Subsequently the Airmobile Force Commander will issue appropriate warning and operation orders.

1003. **Planning Directive.** It is important that the planning directive is issued as early as possible to provide adequate time for the preparation of the force and for detailed plans to be completed. Any initial gaps may be filled in the course of planning. The directive will include:

a. The situation and enemy and friendly forces including the NBC threat.

b. The mission of the airmobile force.

c. Details of all units to comprise the airmobile force.

d. Command and control arrangements, including nomination of the Airmobile Force Commander, where appropriate the Aviation Mission Controller, and liaison and co-ordination requirements.

e. Details of forces to support the airmobile force.

f. A schedule of events that will include outline timing and staging arrangements.

g. Delay/alternative and cancel conditions.

h. Requirements for special airspace control procedures.

1004. **Preparation of the Plans.** On receipt of the planning directive, detailed planning will commence. Liaison officers from appropriate ground and aviation elements will be exchanged as required. Following a thorough estimate process, a plan will be developed to cover the five phases of the operation (Ground, Landing, Air Movement, Loading and Staging), working in reverse order of execution to ensure that the plan meets the overriding requirement of the ground tactical phase. Whenever practical, the individual phases should be planned in close co-ordination with regard to time and space resulting in an air movement table.

a. **The Ground Tactical Phase.** Plans for the ground tactical phase specify actions in the objective area to accomplish the mission. They detail the organisation of all elements of the airmobile force, their employment, missions, and command relationships.

b. **The Landing Phase.** Planning for the landing phase must support the ground tactical phase. The most important considerations in developing plans for the landing phase are landing zone selection, enemy disposition and capabilities**.** The plan should sequence elements into the objective area, ensuring that assault echelons are placed on or near the objective and organised so as to be capable of immediate seizure of objectives and rapid consolidation for subsequent operations. Units must arrive at designated locations and times prepared to conduct the ground tactical phase. Timings for an airmobile operation would normally be based upon arrival in the landing zone (L hour). Where circumstances dictate, timings may be based on departure from the pickup point (Y hour). The designation of days and hours are shown in Volume 1, Chapter 7, Annex A.

c. **The Air Movement Phase.** Plans for the air movement phase are based on those for the ground tactical and landing phases and are normally developed between the Airmobile Force Commander and the Aviation Mission Controller. They provide instructions and a schedule for the air movement of troops, equipment, and supplies from the pickup zone to the landing zone.

They also provide co-ordinating instructions regarding ACMs, air control points, refuelling points, and aircraft speeds, altitudes and formations. The planned use of CAS missions and armed helicopters, to include aerial escort and linkup locations (if different from the pickup zone) should also be included. When the air operation involves multiple helicopter waves, an air movement table is prepared for each wave.

d. **The Loading Phase.** Aircraft loading plans are based on plans for the air movement phase and ensure that troops, equipment and supplies are loaded on the correct aircraft. They specify pickup zones, providing guidance for their establishment and control, and state the order of movement to each pickup zone together with a loading priority. Provision is made for the loading of aircraft with serials of appropriately sized sub-units to ensure that each serial will possess tactical integrity as an operating unit upon landing. The principle of self-sufficiency is applied to ensure that, wherever possible, each load is functional as an entity in itself. Bump plans should be developed to permit the rapid reordering of loads following the loss of an aircraft from a particular wave or when an aircraft cannot accept its allocated load. Planning requirements are greatly reduced by the early preparation of loading plans or air staff tables. Where possible these should be produced prior to operations in accordance with formation SOPs.

e. **The Staging Phase.** Plans for staging are based on the loading plans and prescribe the arrival time of ground elements (troops, equipment and supplies) at the pickup zone in the proper order for movement. Staging plans also restate the pickup zone organisation, define the flight routes to the pickup zone, and provide instructions for linkup of all the aviation elements.

f. **Additional Plans.** The basic phases above must include or make provision for fire support, airspace control, engineer support, logistic and communications plans

g. **Reconnaissance.** To assist in the development of plans for the operation detailed reconnaissance should be conducted on the ground and from the air whenever possible, if OPSEC considerations allow, reconnaissance by ground and aviation commanders should be conducted together. Objectives, landing sites and staging areas will be included in the reconnaissance.

h. **Planning Checklists.** Annexes B and C give headings of ground and air considerations to be covered during planning. They may be used to form the basis of SOPs.

1005. **Orders and Briefings.** Orders for airmobile operations are no different in principle to those for any other type of operation. If time precludes the issue of written orders,

verbal orders and briefings must be comprehensive and cover all aspects of the operational plan. It is important that ground and air commanders understand the

Airmobile Force Commander's Intent so that modifications which they may have to make in the light of changed tactical circumstances are soundly based.

a. **Warning Order.** A warning order will be sent to all participating units by the Airmobile Force Commander as soon as he has completed his mission analysis. This order will outline his intentions for the operation and provide any known timings. Instructions for reconnaissance will also be included.

b. **Operation Order.** One operation order should be sufficient to cover all aspects of the airmobile operation. Separate annexes may be necessary for ground and aviation elements, particularly before the staging phase when the two may be grouped for the first time. A CSS annex could be included but it is more likely that a separate CSS order will be issued.

c. **Briefings.** The need for rapid development of plans for airmobile operations will usually dictate a wide use of verbal briefings to ensure that the force is fully prepared to execute its mission. A change in the tactical situation after the airmobile force is airborne may produce the need for rebriefing in flight, in which case the communications problems referred to in Volume 1, Chapter 8, Section VIII, must be kept in mind.

1006. **Planning Factors:**

a. **Transport Helicopter Lift.** One of the earliest considerations in the planning stages of an airmobile operation is the availability of transport helicopters to provide lift for ground forces. The amount of lift required will vary according to the assigned mission, the tactical situation, terrain, temperature and altitude. If resources are to be attached for the mission, it will be necessary to determine the helicopter type and numbers, times of arrival and expected departure, command and control arrangements, and responsibility for their logistic support, especially the provision of fuel. To simplify planning standard loads of troops or equipment may be used. Standard loads must be capable of being airlifted under the anticipated performance conditions for all the aircraft employed in each lift category, which may not fully exploit the maximum lift capacity of the helicopters. In multinational forces each load must be cleared for transportation by the other nations' helicopters.

b. **Force Build-Up.** The rate at which an airmobile force can be delivered or extracted will depend upon the numbers of helicopters allocated and the deployment distance and CSS factors. It is essential that sufficient combat power is included in the first lift of an assault or the last lift of an extraction to ensure the security of the force. If the success of the operation depends

upon surprise to achieve a tactical advantage, speed and firepower become predominant considerations. Under these circumstances the transport helicopters should be capable of lifting the operating echelon simultaneously. Sufficient lift must remain available after the initial assault to fly in follow-on echelons to build up combat power, to resupply the force and to provide tactical mobility within the objective area if needed.

c. **Terrain.** Landing zones and the aviation routes leading into them must be carefully selected to ensure security en route and adequate cover and concealment for ground elements once they have landed. Routes should not be dictated solely by the tactical situation and the desire to achieve surprise but they should also take account of weather, flight visibility and observability criteria (visual and electronic), especially for nap-of-the-earth flight. Alternate routes should be selected whenever possible.

d. **Weather.** Adverse weather may considerably delay or even prevent the build up of ground forces in the objective area. Forecasts and trends should be analysed carefully before selecting routes and timings and before taking a final decision to commit the force.

e. **Fire Support.** A fire support plan should be developed in conjunction with each phase of the operation but particularly in support of the air movement, landing and ground tactical phases. Factors to be considered will be the availability, reach, and co-ordination of fire resources which may include artillery, armed helicopters and OAS. A known or suspected enemy force on or near the objective will require preparatory fire even though this may result in the loss of surprise. Fire support should be intense and of short duration to maximise the shock effect. Where appropriate the local artillery commander should be responsible for the integration of all forms of fire support.

SECTION II - TRAINING AND REHEARSALS

1007. The individual and unit skills necessary for airmobile operations cannot be developed sufficiently immediately prior to an operation. If it is not possible to dedicate forces to the airmobile role, units should, at the minimum, be earmarked for this type of operation and undertake regular procedural training. If essential to the mission, it may prove possible to include within an airmobile task organization small specialist attachments with no prior expertise, provided there is time to give them adequate training in helicopter drills and operating procedures. Airmobile training should be integrated into appropriate unit training programmes to develop the capability to conduct such operations on a routine basis. Training begins by instructing personnel of small units in techniques and procedures peculiar to airmobile operations. Proficiency in these provides a foundation for the co-ordinated training of ground units with the supporting elements employed during airmobile

operations. Unit training is integrated into tactical training of successively larger units. When training for airmobile operations, ground and aviation units study and train together to assist both elements in improving procedures and developing and refining compatible SOPs and developing concepts to improve exploitation of their airmobile capabilities.

1008. **Training Responsibilities.** The training of units for airmobile operations is the responsibility of commanders at all levels. The objective is to develop a sound working knowledge of all aspects of airmobile operations to enable units to conduct such operations with the speed, flexibility, and assurance required to exploit the airmobile capability. Those infantry units and other appropriate combat, Combat Support (CS) and Combat Service Support (CSS) units earmarked for use in airmobile operations should receive such training as a routine part of their training programmes.

a. **Airmobile Force Commanders.** Commanders of standing airmobile forces and those of formations earmarked for an airmobile role have the responsibility to ensure that ground and helicopter units train together for appropriate phases of their airmobile operations. In particular, they should ensure that:

(1) Commanders and staffs at all levels are trained in planning and conducting airmobile operations.

(2) Those personnel who may be given key roles, such as the Aviation Mission Controller and the commander of the assault ground forces are trained in these roles.

(3) Combat, CS and CSS units are trained in the conduct and support of appropriate phases of airmobile operations.

(4) Units develop and practise SOPs for airmobile operations within a common doctrine.

b. **Ground Force Commanders.** Commanders of ground forces should ensure that troops are trained regularly and able to maintain a good working knowledge of:

(1) A good working knowledge of helicopters and flight safety procedures.

(2) Troop drills with personal and section weapons.

(3) Preparation of landing sites.

(4) Preparation and loading of equipment and supplies for transport as internal or underslung loads.

(5) Basic helicopter marshalling signals.

(4) Techniques to assist in providing helicopter flight crews with tactical orientation.

(5) Unit airmobile SOPs.

c. **Helicopter Unit Commanders.** Commanders of helicopter units are responsible for:

(1) Individual and unit proficiency within their organization.

(2) Assistance to ground unit commanders in training ground forces in the technical aspects of aviation support.

(3) CSAR/Limited Extraction (LIMEX) procedures.

(4) Participating with ground forces in aviation and ground training associated with all appropriate phases of airmobile operations.

(5) Provision of specialist instructors (i.e. Helicopter Handling Teams).

1009. **Conduct of Training.**

a. **Ground Force Training.** Ground combat forces must be proficient in ground tactical operations, particularly when organized, permanently or provisionally, as light infantry forces, with correspondingly light support elements. The conventional tactics and techniques of non-mechanized infantry units provide the basis for the ground operation of airmobile forces. However, these tactics must be developed to exploit the mobility and firepower conferred by the helicopter units and other CS assets unique to the airmobile formation. Intensive training is required in battle drills and procedures to permit rapid assembly and organization for combat, and to ensure that helicopters can be loaded and unloaded speedily. Land navigation proficiency by leaders at all levels must be developed to the point where they are able to locate their positions and navigate quickly and with accuracy. Units must be trained to travel as lightly as possible consistent with the tactical requirements, carrying with them only those items of equipment and supplies that are absolutely necessary to sustain them throughout the operation or until planned resupply. Small units and their commanders must be trained to conduct operations independent of their parent unit.

b. **Helicopter Force Training.** As well as attaining a high level of individual and unit proficiency in their own role, helicopter units must train to operate as part of a larger integrated force and to co-ordinate manoeuvre between transport, armed and reconnaissance helicopter elements. Crews must be able to navigate accurately, and must achieve the ability to operate by night and in marginal weather. Training in special techniques for aircraft loading and refuelling will be necessary. All aircrew must understand the underlying concepts and requirements of airmobile operations to enable them to react flexibly to changing tactical situations and to assume leadership roles in the event of the loss of flight/section leaders.

c. **Individual and Unit Training.** The following subjects should be emphasized during training for airmobile operations:

(1) **Ground Units:**

(a) SOPs and battle drills.

(b) Physical and psychological preparedness.

(c) Method and procedures for control and guidance of aircraft.

(d) Safety procedures in and around aircraft.

(e) Control and adjustment of fire support.

(f) Proficiency in preparing internal and external aircraft loads.

(g) Action during aircraft emergencies including ditching in water. This should ideally include all the different types of aircraft likely to be used on a particular operation.

(h) Troop emplaning and deplaning procedures for helicopters.

(2) **Aviation Units:**

(a) Operational planning.

(b) Marginal weather, reduced visibility, and night flying techniques.

(c) Employment of aerial weapon systems.

(d) Unit control of aircraft and air traffic.

(e) Pathfinder procedures and techniques.

(f) Operations with external loads.

(g) Aerial reconnaissance and security techniques.

(h) Co-ordinated manoeuvre between transport, armed, and reconnaissance helicopters.

(i) Fire support co-ordination procedures and techniques.

(j) Survival equipment training.

(k) Threat identification and enemy tactics.

(l) Survivability techniques and evasive manoeuvres.

(3) **Subjects Common to Aviation and Ground Units:**

(a) Conduct of liaison and co-ordination.

(b) Forward arming and refuelling techniques.

(c) Training for operations in an NBC environment.

(d) Signal security, discipline, and electronic countermeasures.

(e) Communication procedures and training in the use of HF equipment.

(f) Aeromedical evacuation procedures.

(g) Procedures for aerial resupply.

(h) Training in airmobile operation SOPs.

(i) Escape and evasion.

(j) Combat Recovery.

d. **Staff Training.** Staffs of ground and aviation elements must be trained, preferably together, in planning and conducting airmobile operations, with emphasis on the following:

(1) Capabilities, limitations, and requirements of airmobile forces.

(2) Command and staff relationships.

(3) Reverse planning sequence.

(4) Fire support and control.
(5) Logistic procedures.

(6) Airspace control procedures.

(7) Operations in an NBC environment.

1010. **Rehearsals.** All units, to include those in the airmobile role, should make every effort to conduct rehearsals. When rehearsals are conducted, they should be staged under conditions as similar as possible to those actually expected and include all troops and equipment to be involved. Security considerations and lack of adequate time and resources may limit rehearsals or necessitate acceptance of some artificial or simulated conditions. Ideally, each rehearsal should include the following:

a. Operations in the assembly area and associated pickup zones.

b. Landing and dismounting formations and battle drills.

c. Execution of the ground tactical plan.

d. Communication procedures, with emphasis on action in the event of severe EW.

e. Supply and evacuation procedures.

f. Actions to be taken during withdrawal under fire.

g. Revision of plans, if necessary, based on rehearsal experience.

h. Airspace control procedures.

i. Fire support procedures en route, on the ground, and upon extraction.

j. Security of pickup and landing zones.

k. Procedures for CAS.

ANNEX 10A - PLANNING FACTORS

10A1. The Airmobile Force Commander and his staff will complete the estimate process, consulting the Aviation Mission Controller at the earliest possible stage and will issue a warning order. In planning for the operation as a whole, and for each individual phase, a number of factors should be considered.

10A2. **Intelligence Requirements**.

a. Enemy positions, including the NBC threat.

b. Aerial reconnaissance of objective area by Airmobile Force Commander, if feasible.

c. Tactical air reconnaissance.

d. Sensor reports.

e. Terrain study.

f. Weather forecast.

g. Latest intelligence summary.

10A3. **Ground Tactical Phase**.

a. Choice of objectives.

b. Designation of available Landing Zones (LZs) after consideration of distances between objective and LZs.

c. Establishment of D-day and H-hour.

d. Identification of special tasks required to accomplish mission.

e. Assessment of means available to accomplish mission including:

(1) Organic troops.

(2) Aviation resources, including armed helicopters, (exchange of initial information, for example, Support requirements from ground element such as Forward Air Refuelling Points (FARPs))

(3) Offensive Air Support (OAS), Electronic Warfare (EW), Suppression of Enemy Air Defences (SEAD) (establish liaison with Aviation Mission Controller and/or Air Liaison Officer (ALO)).

(4) Engineers.

(5) Communications.

(6) Medical.

(7) Fire support.

(a) OAS.

(b) Field artillery within range.

(c) Other indirect fire weapons (Morter and naval gunfire).

(d) Preparatory fire for LZs (signals for lifting and/or shifting).

(e) Flight routes.

(f) SEAD.

(8) Control measures needed including Weapons Control Status.

(9) Subsequent operations (for example: defence, linkup, withdrawl).

(10) Combat Service Support

10A4. **Landing Phase**.

a. Selection of primary and alternative LZs (capacity).

b. LZ identification procedures including:

(1) Coloured smoke.

(2) Panels.

(3) Flares.

(4) Lights.

c. Timing for initial landing (L-hour).

d. Use of pathfinders.

e. Landing formation(s).

f. Approach and departure directions.

g. LZ preparatory fire to support landing plan and ground tactical plan including:

(1) OAS, EW, SEAD.

(2) Use of indirect fire weapons.

(3) Use of armed helicopters

(4) Use of EW.

h. Other fire support considerations include:

(1) Shifting fire.

(2) Lifting fire.

(3) SEAD.

10A5. **Air Movement Phase**.

a. Flight routes (primary-alternate-return) require the following data:

(1) Identification points, air control points, checkpoints.

(2) Phase lines (if used).

(3) Estimate time en route.

(4) Manoeuvre area for armed helicopters.

(5) Holding areas, to include locations and security.

(6) Friendly air defences.

(7) Enemy air defences.

(8) Weather.

b. Air movement table to include:

(1) Units to be lifted.

(2) Aviation units.

(3) Number and type of transport helicopters allocated to each unit.

(4) Lift-off times related to Y-hour.

(5) Routes.

(6) LZs

(7) L-hour (landing time of initial serials).

c. Communications plan including alternate:

(1) Radio frequencies.

(2) Visual/audio signals.

(3) Airborne radio relay.

d. Refuelling/rearming arrangements (siting of FARPs).

10A6. **Loading Phase**.

a. Assignment of units to pickup zones (primary/alternate).

b. Designation of holding areas.

c. Assignment of serials to helicopters.

d. Development of a bump contingency plan.

e. Employment of armed helicopters.

10A7. **Staging Phase**.

a. Order and timing of movement of ground elements to pickup zones.

b. Routes from assembly areas to holding areas to pickup zone(s).

c. Pickup zone organisation.

d. Flight routes to pickup zone.

e. Aviation linkup procedures (phasing/timing).

10A8. **Supporting Plans for Airmobile Operations**.

a. Alternate plans and procedures due to weather (H-hour increment to delay operation).

b. Downed helicopter procedures to include:

(1) Crew and passenger duties.

(2) Aircraft disposition instruction

(3) Combat Search and Rescue.

c. Rendezvous points.

d. Escape and evasion instructions.

e. Helicopter operating sites.

f. Rules of engagement.

g. Deception plans.

h. Availability of spare aircraft.

i. Reconnaissance (air-ground) that will be conducted.

j. Straggler control procedures.

k. Reporting (en route, lift-off, touchdown, intelligence and contact).

l. Aircraft disposition after assault.

m. Medical support and evacuation procedures

n. Combat Service Support.

(INTENTIONALLY BLANK)

ANNEX 10B - AIR ASPECTS

10B1. **General**. In assisting with the development of plans for an airmobile operation, the Aviation Mission Controller will need to consider a number of factors. This list summarises essential air perspectives. Airspace control procedures should be in accordance with the airspace control plan and with ATP-40.

10B2. **Initial Briefings**.

a. Briefing from the staff of the Airmobile Force Commander:

(1) Mission.

(2) Location.

(3) Approximate ground force size.

(4) Aviation elements available/assigned.

(5) Aerial reconnaissance requirements.

(6) Special instructions.

b. Briefing from aviation element(s):

(1) Number of aircraft, by type, that are available for the operation (status of assets).

(2) Load capability in terms of personnel and equipment for each type of aircraft.

(3) Number of reconnaissance aircraft and time available.

(4) Availability of TACPs.

(5) Specific problem areas or requirements that may affect support of ground unit (FARP location and time of operation). Estimated refuelling time, and refuel-rearm plan).

(6) Weather.

10B3. **Briefing/Planning with Ground Forces of Mutual Arrangements**.

a. Brief ground force commander on number and type of aircraft available, load capability and other essential information.

b. Obtain initial briefing on the following:

(1) Enemy situation including NBC threat.

(2) Friendly situation.

(3) Plans for ground tactical phase (make map overlays).

(4) Support available to participating aviation units. Co-ordinate and integrate plans as necessary.

c. Assist in development of plans for the following:

(1) Movement to pickup zone for ground forces and aviation elements and control facilities.

(2) Loading.

(a) Location, selection and marking of pickup zones.

(b) Aircraft marking procedures.

(c) Landing formation and direction.

(d) Troop and freight loads.

(e) Communication control procedures.

(f) Pickup zone control, including communications details.

(g) Manifesting (completion of loading tables).

(h) Priorities of bump by aircraft.

(i) Timings.

d. Air Movement.

(1) Flight route. Provide guidance and give technical approval on selection of identification pints, airspace control points and checkpoints.

(2) Alternate and return flight routes.

(3) Formation: select en route formation that gives the most control and is least vulnerable to enemy interference; provide guidance for selection of pickup zone and LZ formations.

(4) Altitude and speed.

(5) Overwatch and security plan for attack and reconnaissance helicopters.

(6) Fire support plan en route.

(7) Air Movement table (assist in completing).

(8) Pathfinder support (finalise).

e. Landing.

(1) Touchdown time(s) (L-hour in relation to H-hour).

(2) LZ designation and locations.

(3) Size and description.

(4) LZ marking and procedures.

(5) Landing directions.

(6) Landing formation.

(7) Traffic pattern and subsequent lifts.

(8) Communications, control procedures and use of pathfinders.

(9) Close Air Support (start time, duration, target and type of ordnance and attach direction).

(10) Indirect fire (start time, duration, target and type of fuse, special instructions).

(11) Plan for armed helicopter unit's scheme of manoeuvre and plan foe security (start time, duration, special instruction, attack direction).

(12) Use of transport helicopter weapons (to provide suppressive fire upon landing).

(13) Fire plan of disembarking troops.

(14) Call signs and/or frequency signals for lifting and/or shifting support fire.

f. Refuelling requirements.

(1) Location of FARPs.

(2) Timings.

g. Aircraft maintenance.

(1) Downed aircraft procedures.

(2) Spare aircraft procedures.

10B4. **Final Actions**.

a. Obtain copies of the Operations Order with overlays and annexes.

b. Confirm all times.

c. Last-minute weather check.

(1) Mission procedures (delay increments).

(2) Alert procedures.

10B5. **Briefing of Aviation Elements**.

a. Brief commanders and aircrew, as appropriate, on all the above information.

b. Maintain close liaison with the ground force commander.

CHAPTER 11 - TRANSPORT OF TROOPS BY HELICOPTER

Related Publications:

STANAG 2087 MED Medical Employment of Air Transport in the Forward Area.
STANAG 3204 AMD Aeromedical Evacuation.

General Procedures

1101. **Aim.** The aim of this chapter is to establish standard procedures in order to facilitate the transport of troops and their personal equipment in helicopters.

1102. **Definitions.** The following terms used in this section are defined in the Glossary: Aircraft Commander, Chalk Commander, Chalk Number, Serial, Crewman and Ready Position.

1103. **Types of Helicopters:**

a. These procedures are designed to be used with all types of transport helicopters engaged in tactical operations.

b. The procedures only apply to helicopters that normally transport troops. When other helicopters are used, the troops must be specially briefed.

1104. **Preparation of Helicopters:**

a. If operationally necessary, a suitable deplaning rope or other lowering device will be fitted. For lowering stores, a light line longer than the deplaning rope will be fitted, with a hook attached for the rapid attachment and detachment of loads.

b. It is desirable to provide intercom and external radio facilities at the chalk/serial commander's position.

c. In assault missions, if the troop seats are removed, safety belts must remain fitted or safety ropes fastened to the floor tie-down rings.

1105. **Preparatory Briefing and Action:**

a. **Preparation.** To facilitate the planning and preparation of helicopter operations, standard operating procedures jointly approved by senior commanders are to be developed for both normal and quick-reaction

operations. For specific operations, the air and ground forces are to exchange information which should include the following:

(1) Time of pick-up.

(2) Total number of troops to be lifted.

(3) Point of departure.

(4) Destination.

(5) Requirement for back loading.

(6) Operational data, such as map references, organisation and marking of loading and landing points, communication, preparation of schedules and alternative schedules, survival equipment, refuelling and logistic support.

(7) Intelligence data - enemy positions etc.

(8) Requirements of helicopter unit for support personnel etc., at departure point and destination.

(9) Request for air/helicopter escort, fire support, command and control aircraft etc.

(10) Action to be taken in the event of downed aircraft.

(11) Aircraft type, number of aircraft available and allowable load.

(12) Method of movement.

(13) Airspace control measures.

(14) Lighting requirements for night operations.

(15) Diagram or sketch of seating arrangement of lift aircraft.

(16) Landing site condition, e.g. dusty, snow-covered.

b. **Actions by Helicopter Unit:**

(1) Co-ordinate with the supported force.

(2) Ensure that supervision is provided to the supported force during loading, tie-down and off-loading of personnel and material whenever possible.

(3) Establish timely liaison with the supported unit to provide for movement planning to include aircraft availability, allowable cabin/cargo load (ACL), special loading instructions, and the restriction on the use of chalk/serial radio equipment in the aircraft.

(4) Provide survival equipment including life jackets where necessary.

(5) Give a pre-flight briefing on emergency procedures to include location and use of all emergency equipment and exits.

(6) Brief aircrews, to include mission, weather, enemy ground situation and air defence threat, route of flight, communication procedures, method of movement, IFR break-up and recovery procedures, downed aircraft procedures, and night lighting requirements.

(7) Where possible, conduct rehearsals for loading and unloading of helicopters.

c. **Actions by Supported Unit:**

(1) Allocate chalk/serial numbers to troops.

(2) Brief troops on the following points (assisted where necessary by helicopter unit):

(a) The emplaning location of the helicopters, for each chalk/serial number.

(b) The dangers inherent in operating in the close proximity of helicopters on the ground.

(c) The necessity for weapons to be on SAFE and without a round in the chamber, and for them to be carried so as to avoid damage to the helicopter.

(d) The removal or folding of radio antennae in order to avoid damage to the rotor blades.

(e) Safety and emergency procedures, to include any known hazards in the landing zone.

(f) The aircraft commander has final authority on all matters concerning the safe operation of the aircraft.

(g) Troops will not throw items or fire from the aircraft unless specifically authorised to do so by the aircraft commander.

(h) The implications of the carriage of dangerous air cargo.

(i) The restriction in the use of lights by personnel in the landing area.

(3) Station the troops in the ready position at the designated time.

(4) Ensure that the helicopter unit commander is briefed on the supported unit's mission.

1106. **Emplaning.** The responsibilities of the chalk/serial commander, on receipt of the signal to emplane (see Figure 11-I) are:

a. To lead his troops to the helicopter.

b. To station himself near the door or ramp and assist his troops to emplane.

c. To direct his troops to the correct position in the helicopter, if no crewman is present, and to emplane last of all closing and securing the doors where applicable.

d. To ensure that safety harnesses/belts are secured and then to notify the crewman or pilot.

1107. **In-Flight Procedure:**

a. It is the responsibility of the pilot in command to ensure that communication is established with the chalk/serial.

b. As soon as possible after emplaning, the chalk commander should brief the crew on any changes in the tactical situation, changes of LS/LP or any item which may influence the safe operation of the aircraft, its crew or passengers.

c. On approaching the landing point, the chalk/serial commander should be informed of the helicopter's heading on touchdown and any other pertinent information that will change the troops' pre-flight briefing, e.g. the exact position of the landing point.

1108. **Deplaning:**

a. On approaching the landing point the crew are to signal 'stand-by' (see Figure 11-I) and ensure that the chalk/serial commander is informed of any deplaning hazards.

b. On receipt of the 'deplane' signal (see Figure 11-I) the troops are to release harness/belts and follow the chalk/serial commander out of the helicopter.

c. The chalk/serial commander or his designated representative is to give the 'troops clear' signal to the pilot or the crewman (see Figure 11-I).

d. When deplaning on a slope, the chalk/serial commander must ensure that his troops keep clear of the rotor blades, either by remaining beside the helicopter until it lifts off, or by moving down slope from the helicopter.

e. For deck operations on board ship, a Flight Deck Guide will lead off the deplaning troops in a safe direction.

f. It may sometimes be necessary for troops to deplane by jumping out from a low hover, or by using ropes, ladders or other devices from greater heights. In such cases, troops must be specially briefed and trained (see Emplaning and Deplaning at the High Hover).

Emplaning and Deplaning at the High Hover

1109. **Aim.** The aim of this section is to standardise methods and procedures to be adopted when troops and cargo are to be lowered from or recovered to a helicopter at the high hover.

1010. **Definitions.** The following terms that may be used during briefing or planning for tactical helicopter operations at the high hover are defined in the Glossary: Abseiling/Rappelling, High Hover, Ladder, Roping and Winching/Hoisting.

1111. **Procedures:**

a. **Preparation of Helicopters.** It is the responsibility of the helicopter unit to prepare the helicopters by masking all sharp edges likely to come into contact with any rope or tape and also to remove any equipment or fittings likely to impede movement. All loose equipment should be securely fastened or removed to prevent it from falling on descending personnel or tangling with the descending equipment. The supported unit may be required to provide specialist advice.

b. **Preparatory Briefing.** If feasible, this briefing is to be undertaken by the unit(s) providing the equipment and is to be attended by a member of each

helicopter crew and the troops involved. The standing operating procedures of the unit(s) providing the equipment are to be used. The briefing must include helicopter and equipment emergency procedures and the signals shown at Figures 11-I and 11-II.

Action **(a)**	**Day** **(b)**	**Night (see Note 1)** **(c)**
EMPLANE	'Thumbs up' by pilot or crewman.	One flash of flashlight or emplaning light by or crewman.
READY TO TAKE-OFF	Intercom or tap pilot.	Same as day.
STAND-BY (See Note 3)	Intercom and/or 2 short bell rings, or red light **'ON'**.	Same as day.
DEPLANE (See Note 3)	Intercom and/or 1 short ring, or green light **'ON'**.	Same as day.
TROOPS CLEAR	'Thumbs up' by Chalk/ Serial Commander or his designated representative.	Two flashes of flashlight by Chalk/Serial Commander or his designated representative.
EMERGENCY (See Note 3)	Intercom and/or a continuous bell ring or flashing red light.	Same as day.

Figure 11-I: Signals Used During Carriage of Troops by Helicopter

NOTES:

1. In some situations, e.g. when aircraft ground time must be kept to a minimum, the night signals shown may not be practicable.

2. At night, light signals should be used with caution to avoid impairment of aircrew vision.

3. Aircrew hand and arm signals for these actions are illustrated in Figure 11-II.

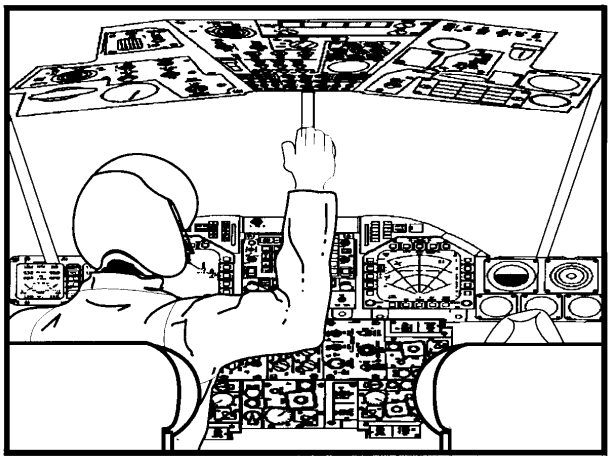

(A)

STAND-BY: Crew member elevates either arm forming 90° bend at elbow with closed hand extended vertically. Position is held until **DEPLANE** signal is given.

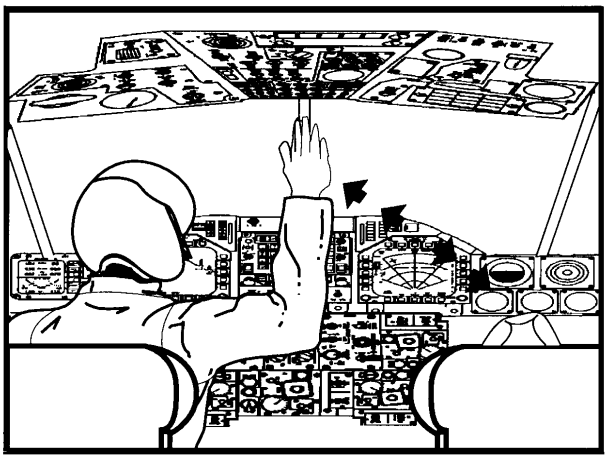

(B)

DEPLANE: Crew member elevates either arm forming 90° bend at elbow with hand fully extended vertically while rotating the forearm from the vertical to the horizontal position.

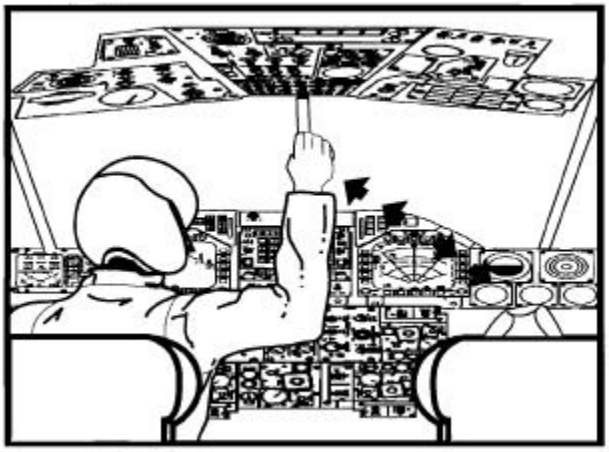

(C)

EMERGENCY: Crew member makes the STAND-BY signal then moves hand and forearm vertically down and up repeatedly.

Figure 11-II: Aircrew Hand and Arm Signals

Aeromedical Evacuation

1112. **Aim.** The aim of this section is to give general information on aeromedical evacuation by helicopter. The detailed procedures are contained in STANAGs 2087 MED and 3204 AMD but the terms of the agreements are not presented here. Therefore, this section should be used only as a guide.

1113. **General:**

a. Medical evacuation by helicopter is to be used as far forward as the tactical situation will permit. If necessary, this may apply to evacuation from enemy territory.

b. Aeromedical evacuation is to be controlled in accordance with local directives and the organisation of the forces concerned. Its purpose is to move the sick and wounded promptly in order to reduce mortality.

c. Sick and wounded should be picked up as soon after the request for air evacuation as possible and evacuated directly to designated treatment facilities.

1114. **Priorities.** Aeromedical priorities are allocated on the following basis:

a. **PRIORITY 1/URGENT.** Emergency patients for whom speedy evacuation is necessary to save life or limb, to prevent complication of serious illness or to avoid serious permanent disability.

b. **PRIORITY 2/PRIORITY.** Patients who require specialised treatment not available locally and who are liable to suffer unnecessary pain or disability unless evacuated with the least possible delay.

c. **PRIORITY 3/ROUTINE.** Patients whose immediate treatment requirements are available locally but whose prognosis would definitely benefit by air evacuation on routine scheduled flights.

1115. **Requesting and Tasking Information.** (See Volume 2, Chapter 3, Annex A) When aeromedical evacuation is requested or tasked the following additional information is required:

a. Specify whether the sick and wounded are fit for external litter, internal stretcher or sitting evacuation.

b. Exact location by grid co-ordinates or other method as directed by the tactical field SOP.

c. Time the sick and wounded will be ready for evacuation.

d. Special arrangements for:

(1) Special medical supplies or items of equipment.

(2) Medical personnel to act as escorts.

1116. **Communication.** A communication capability which provides for direct, or minimal relay of, transmission between the authority controlling medical missions, the aircraft and the requesting unit is to be provided wherever possible. Communications are to be minimised by relaying accurate information in the original request for air evacuation. An air-to-ground communication capability at the landing site is desirable.

CHAPTER 12 - TRANSPORT OF CARGO BY HELICOPTER

Related Publications:

STANAG 3542 HIS	Technical Criteria for the Transport of Cargo by Helicopter.
STANAG 2950 HIS	Technical Criteria for External Cargo Carrying Nets.
STANAG 2403 HIS	Technical Criteria for External Cargo Carrying Strops/Pendants.
STANAG 2445 HIS	Criteria for the Clearance of Underslung Loads and Helicopter underslung Load Equipment (HUSLE).
STANAG 2949 HIS	Technical Criteria for External Cargo Carrying Slings.
STANAG 3854 AT	Policies and Procedures Governing the Air Transportation of Dangerous Cargo.
ICAO DOC 9284	Technical Instructions for the Safe Transport of - AN905 Dangerous Goods by Air.

General Rules, Operating Responsibilities and Procedures

1201. **Aim.** The aim of this chapter is to establish general rules, operating responsibilities and procedures to govern the transport of loads by helicopter.

1202. **Planning and Preparation of Supported Unit.** The supported unit is responsible for the co-ordination of air transport activities by establishing liaison with the helicopter unit and other agencies. In particular it is responsible for:

a. Establishing priority for transport of cargo.

b. Provision of trained personnel, material or handling equipment that may be required to accomplish cargo preparation, rigging, hook-up release and de-rigging as appropriate. This should include all equipment required to contain or rig an external load to enable it to be attached to the helicopter hook, e.g. vehicles, containers, pallets, slings, stops, shackles, clevises and padding.

c. Preparation of internal cargo by aircraft loads, to include shoring if required.

d. Preparation of external cargo by aircraft loads. Such loads should be prepared and rigged so as to minimise oscillation while suspended from the aircraft during flight. Loads must not exceed allowable cargo weight established by the helicopter unit.

e. Preparation of dangerous cargo in accordance with the terms of current international or national regulations.

f. Provision of information regarding internal and external cargo on weight, centre of gravity, density loading, dimensions, axle weight of vehicles, descriptions and quantities of all cargo to the helicopter unit. Whenever possible, the weight and density loading shall be marked on the complete cargo and each individual element to be loaded. Where the weight or density of a load/element is not known, the supported unit is responsible for notifying the helicopter pilot or crewman and is to advise on the assessed weight/density.

g. Provision of any static electricity discharging devices or protective clothing and equipment that may be required during external cargo transport operations.

h. Selection and preparation of the pickup and release sites, with technical advice provided by the helicopter unit when required.

NOTE: Some of the information details above will be passed to the helicopter unit in the originating request in the form specified in Chapter 3, Annex B (Helicopter Tasking Messages).

1203. **Planning and Preparation by Helicopter Unit.** The helicopter unit is responsible for the following:

a. Liaison with the supported unit to co-ordinate planning, to include information and advice on:

(1) Aircraft availability.

(2) Allowable cargo load.

(3) Special loading instructions such as the selection of internal or external load carriage.

(4) Selection and preparation of pickup and release sites.

(5) Safety and security instructions.

(6) Procedures to ensure the maximum recovery of all rigging equipment.

(7) Procedures to ensure that internal/external cargo is properly secured or rigged.

(8) Supplying the following special equipment which is not available to the supported unit:

(9) **For Internal Loads:** lashings, tie-downs and equipment organic to the helicopter unit, required exclusively for helicopter transport operations.

(10) **For External Loads:** all equipment connected to the helicopter including the hook installation that engages the load. Additionally, any other equipment organic to the helicopter unit required exclusively for transport operations.

b. Supplying technical supervision to the supported unit during loading, tie-down and off-loading of cargo.

1204. **Loading (Supported Unit):**

a. The supported unit will normally undertake the loading and restraining of internal cargo under the supervision of a crew member of the helicopter or other trained personnel.

b. Loading is to be accomplished by one of two methods:

(1) **Distributed Loading.** Loading by compartments of the helicopter.

(2) **Concentrated Loading.** Loading of large items placing the Centre of Gravity (CG) of the item at a particular station number of the helicopter. Items to be considered for concentrated loading are trucks, large boxes, missiles etc. The CG of such items must be known and is the responsibility of the supported unit.

c. The supported unit is responsible for presenting loads to be carried externally in a safe condition for flight, rigged in accordance with their national procedure, and for correctly attaching the load to the helicopter hook. Large or very heavy loads shall be rigged and presented with the intended helicopter hook position as close to the load's CG position as possible.

CAUTION: The CG markings of trucks loaded with equipment must not be mistaken for the CG of both the truck and its cargo.

1205. **Loading (Helicopter Unit).** The final responsibility for the acceptance of a load including the distribution and restraint of the internal cargo, rests with the helicopter pilot in command.

1206. **Unloading (Supported Unit).** The supported unit is normally responsible for the following actions:

a. Unloading cargo carried internally.

b. The recovery of slings, nets etc.

1207. **Unloading (Helicopter Unit):**

a. The helicopter unit may assist in the recovery of slings, nets etc. by arranging for back-loading in helicopters returning empty to the supported unit.

b. The final responsibility for the safe unloading or release of cargo, rests with the helicopter pilot in command.

1208. **Marshalling (Supported Unit).** The responsibilities of the supported unit are as follows:

a. Provision of specially trained personnel to marshal helicopters to their landing points for the pick-up and release of external loads. Where the operational environment permits, these personnel are to be equipped with and wear distinctly coloured, e.g. fluorescent, international orange or yellow, clothing.

b. The use of marshalling signals as set out in Chapter 13, Annex A.

c. The positioning of marshallers and hook-up personnel.

d. The restriction of personnel in the danger area around the helicopter, to those directly involved in the marshalling, loading, hook-up or release of cargo.

e. When conducting hook-ups at night, ground personnel must be equipped with a night lighting device. The intensity of this light will vary, depending on whether the aircrew are using night vision devices or are operating unaided.

f. To aid the pilot in hook-up of loads at night, additional reference lighting may be requested by the helicopter unit.

1209. **Marshalling (Helicopter Unit).** The helicopter unit may issue special instructions on hook-up procedures if these are necessary.

Operational Carriage of Ammunition and Fuel

1210. **Aim.** The aim of this section is to standardise the regulations applicable when ammunition and fuel are to be carried as cargo by helicopters under operational conditions in peacetime or wartime.

1211. **Agreement.** Participating nations agree that:

a. They will clear for carriage by their helicopters any ammunition that another member nation has declared technically air-transportable, with simultaneous acceptance of the categorisation (classification according to danger classes).

b. Where helicopters are operated in the normal air transport role the provisions of STANAG 3854 AT will apply for carriage of fuel and ammunition as well as other dangerous cargo.

c. For all other helicopter operations in peacetime or wartime, ammunition and fuel will be carried in accordance with the regulations contained in this section.

d. All other dangerous cargo will be transported according to the appropriate regulations.

1212. **General Procedures**:

a. Before the carriage of ammunition and fuel, the supported unit will:

(1) Identify the cargo in the request for air transport.

(2) Label the cargo in accordance with the appropriate regulations.

(3) Identify the cargo in the loading list.

b. The following basic rules apply:

(1) Cargo is to be prepared for air transport so that danger to the helicopter and the crew is reduced to a minimum.

(2) Cargo is to be loaded in a way that it is protected from damage inflicted by sharp edges within the cargo compartment of the helicopter.

c. The helicopter crew is responsible for meeting the safety requirements for the cargo hold for the period between loading and unloading of the helicopter.

d. The supported unit shall prepare external loads according to its national regulations, make them air-transportable and hang them onto the lifting hook of the helicopter.

e. The load originator is responsible for specifying the STANAG(s) used in preparation of the load.

f. In the case of cargo being handed over from one nation to another for carriage without previous or accompanying instructions as to safety precautions, the safety regulations of the nation accepting the cargo will apply.

g. When deemed necessary by the helicopter unit, the supported unit will provide qualified personnel to escort as required.

1213. **Safety Regulations for the Handling of Ammunition and Fuel**:

a. Ammunition and fuel are dangerous items that due to their characteristics constitute a potential hazard to the helicopter, its crew and, if the helicopter is parked while loaded, to the surroundings (other aircraft or objects that are close enough to be at risk).

b. Ammunition and fuel shall be stored outside the landing site. External loads should be placed at the pick-up points only shortly before the arrival of the helicopter.

c. At the landing site, the supported unit should provide the best available fire fighting arrangements and where possible inform the helicopter unit of the following:

(1) The fire extinguishing compounds appropriate to the type of cargo to be transported.

(2) Fire fighting equipment available at the pick-up site.

(3) Appropriate fire fighting procedures and briefing of ground crews on conditions under which fire fighting personnel shall fight a fire, i.e. only from a certain distance or from protective cover, etc.

d. The helicopter unit, where possible, will provide appropriate fire extinguishing equipment to be carried on board the helicopter.

1214. **Ammunition**:

a. Ammunition is classified ‘explosives’ according to the national regulations, STANAG 3854 AT or the ICAO Technical Instructions respectively.

b. Ammunition must be technically suitable and compatible for carriage by helicopter, in accordance with national regulations. If not packed in the original packing material, extra care must be given to the labelling.

c. Transportation of ammunition shall not be considered as carriage when the ammunition is:

(1) Needed by the soldiers on board the helicopters immediately after landing for fulfilling their combat mission, or;

(2) Part of the equipment of the helicopter or of the helicopter crew.

d. When a helicopter is carrying ammunition, the landing place is classified as an in-transit storage place for ammunition and therefore becomes:

(1) A risk to vulnerable locations (e.g. residential areas, public roads, barracks, taxiways, parking lots and aircraft parking areas).

(2) Vulnerable to accident, interference or hostile actions and needs to be protected.

e. The required safe distances are to be determined according to the corresponding regulations of the nation where the transfer of the load takes place.

1215. **Fuel**:

a. Fuel (POL) is classified 'highly flammable liquid' or 'flammable compressed gas' and labelled in accordance with STANAG 3854 AT or the ICAO Technical Instructions, respectively.

b. Fuel is to be carried only in approved containers or jerry cans that meet the regulations of the originating nation. The content of the containers or jerry cans must not exceed 90% unless specifically cleared for a safe higher content. The closure shall be leak-proof.

c. The content of fuel tanks is governed by ICAO Technical Instructions. Vehicle fuel tanks are to contain some fuel but not more than 75% of tank capacity; the fuel tanks of ground support equipment, static or self-propelled, are to contain at least some fuel but not more than 25% of tank capacity.

d. The type of carriage (i.e. internal or underslung load) shall be governed by the regulations of the nation providing the helicopters.

1216. **Safety Regulations for Helicopters:**

a. There shall be no smoking, either within 25 m from the helicopter, or on board the helicopter when it is carrying ammunition or fuel. The use of open flame light within 25 m of the helicopter or in the cargo hold is prohibited.

b. Helicopters scheduled for carriage of ammunition or fuel should be refuelled if required prior to loading. Defuelling of helicopters loaded with this cargo is prohibited.

c. Prior to loading and unloading, as well as pick-up of slung loads of ammunition and fuel, the static electricity of the helicopter shall be discharged. A non-conducting attaching device should be positioned between the load and hook.

d. Where possible, all loading and unloading procedures must be carried out with equipment authorised for this purpose and under the supervision of qualified personnel.

e. The cargo shall be loaded and lashed in such a manner as to be stationary during flight and checked at regular intervals. The cargo shall not be loaded near such potentially hazardous installations as heat conduits, heaters, or airborne electrical installations and such.

f. Where necessary, prior to take-off, the helicopter crew in charge of transporting the cargo shall be briefed by the supported unit on special handling measures.

g. The aircraft shall be well ventilated at all times.

h. Unauthorised persons are to be kept away from helicopters carrying ammunition and fuel and non-essential personnel will not be transported on the same lift.

i. Service and maintenance work that could constitute a fire hazard shall not be performed on any helicopter loaded with ammunition or fuel as cargo. This cargo must be off-loaded prior to such work being performed.

j. Whenever a helicopter loaded with ammunition or fuel as cargo takes off or lands at an airport, the Air Traffic Control (ATC) Service of that airport shall be notified by the helicopter pilot about:

   (1) Quantity and type of load.

   (2) Classification of cargo.

k. If a fire breaks out in a cargo hold during a flight, an attempt shall be made to extinguish it by means of the airborne fire extinguishers and a landing will be made to the closest area clear of obstruction and the cargo inspected before further flight is attempted.

l. If during flight, or due to an emergency situation, a slung load has to be jettisoned and/or if it can be supposed that a large quantity of fuel has leaked out, the fact is to be reported to the ATC Service. In case of radio failure, the crew shall inform the local authorities at the first opportunity.

m. In peacetime, it is prohibited to fly helicopters loaded with ammunition and fuel as cargo over residential areas, and whenever possible, flying over houses, public means of transportation or groups of people shall be avoided.

n. When helicopters carrying ammunition and/or fuel are temporarily parked, the following points shall be considered:

(1) Minimum safe distance from objects to be protected shall be 275 m.

(2) The parking area should be in the shade.

(3) Helicopters must maintain a minimum safe distance of 25 m (measured from the periphery of the main rotor disk) from one another.

(4) Where necessary, the parking area shall be secured by guards.

(5) Placing of helicopters in aircraft hangars should be avoided. If the helicopter must be parked in an aircraft hangar it should be grounded to an appropriate device and any other aircraft parked therein should be removed.

(6) Aircraft shall be grounded (earthed) to an appropriate device.

Criteria for the Clearance of External Air Transported Cargo

1217. STANAG 2445 defines the minimum criteria for the clearance, rigging and lifting of helicopter underslung loads and HUSLE. It is intended to permit and aid interoperability between nations conducting combined USL operations.

1218. **Helicopter Underslung Load Equipment and Interoperability Tables**. STANAG 2445 - Table C[1] gives the underslung load interoperability information required by both helicopter crews and ground handlers for the clearance of Helicopter Underslung Load Equipment (HUSLE). This information is accessible on the NATO Website where an up to date version will be maintained.[2] The Table shows basic information and limitations relevant to each load. When necessary, it should be used in conjunction with the appropriate National Underslung Load Clearance (USLC) document.

[1] Example reproduced with explanatory notes at Annex 12A.
[2] The UK has undertaken to maintain and update these interoperability tables on its Website - www.jateu.mod.uk which will be hyperlinked to the NATO Website.

(INTENTIONALLY BLANK)

ANNEX 12A – EXAMPLE OF UNDERSLUNG LOAD INTEROPERABILITY INFORMATION FOR HELICOPTER CREWS

Ser (a)	Equipment and HUSLE (Note 1) (b)	USLC Ref (Note 2) (c)	Date of Issue (d)	Helo/HUSLE Interface (Note 3) (e)	Max AUW (kg) (Note 4) (f)	Flight limitations (Note 5)			Cleared Helicopter Types (Note 6) (j)	Remarks/Reservations (k)
						IAS (g)	AOB (h)	ROD (I)		
	BELGIAN EQUIPMENT									
1	Iltis Jeep:									
a	MILAN, using 2500 kg 4 leg nylon webbing strop of leg length 3.70 m (NSN/830-500-1775-0669).	BE-4/1.1	Sep 94	SWS	1574	120	30	1000	GE; CH53 UK; C, P	Use either pendant, 10 tonne shackle and suspension ring supplied with load or any capable in-service strop.
b	RADIO, with trailer ¼ tonne using 2500 kg 6 leg nylon webbing sling of leg lengths 2 x 3.70, 2 x 4.15, 2 x 5.10 m (NSN/830-500-1775-0669).	BE-4/2.1	Sep 94	SWS	2086	120	30	1000	GE; CH53 UK; C, P	Use either pendant, 10 tonne shackle and suspension ring supplied with load or any capable in-service strop.

NOTES:

1. Helicopter Underslung Load Equipment (HUSLE)
   NSN = NATO Stock Number
   SML = Sling Multiple Leg

2. Underslung Load Clearance Reference (USLC Ref) by National Clearance Document.

   BE = SYLTEC 5000
   GE12 = TDV 1670/012-15 (2500 kg Sling Set)
   GE13 = TDV 1670/013-15 (6000 kg Sling Set)
   NL = AP 101A-1105-1B (2nd Edition)
   UK = AP 101A-1105-1B (2nd Edition)

3. a. SWS = Extension Strop with Swivel Hook. Normally a MANDATORY requirement where stated. GE SOPs stipulate that all loads being flown beneath a CH53 must be interfaced via a SWS.

   b. Pr = HUSLE attachment direct to Primary (aircraft) Hook permitted. See 3a above.

4. Max All up Weight (AUW)= The published maximum loaded weight plus the weight of the slinging equipment.

5. Flight Limitations: The flight parameters listed below are advisory and helicopter crews should observe their normal flying precautions when carrying USLs.

   a. Max Indicated Airspeed (IAS). Maximum speed in knots (kts).

   b. Max Angle of Bank (AOB). Measured in degrees.

   c. Max Rate of Descent (ROD). Measured in feet per minute (fpm).

   d. The figures given in the table may be higher than the standard flight limitations for a particular helicopter type. In these cases, the aircraft limitations must not be exceeded.

6. Cleared Helicopter Types: Aircraft which have been cleared by the National Authority and are capable of carrying the load.

This table is applicable to the following aircraft: -							
CH = Chinook	PU = Puma	SK = Sea King	LX = Lynx	GZ = Gazelle	SQ = Squirrel	GR = Griffin	ML = Merlin
212 = Bell 212	CO = Cougar	53G = CH53G	53GS = CH53GS	UH1D = Bell UH1D	UH1H = Bell UH1U	S60 = Blackhawk	AB206 = Agusta AB206 JR

CHAPTER 13 - PROCEDURES IN THE EVENT OF DOWNED HELICOPTERS

Related Publications:

ACP-136	Communication Instructions - Panel Signalling.
ATP-10	Search and Rescue.

1301. **Aim.** The aim of this chapter is to standardise the immediate action and priorities in the event of a helicopter being downed during an operational mission.

1302. **General.** A common procedure should be agreed for recovery, security, or destruction of downed helicopters. In combat operations, recovery of downed helicopters and crews is secondary to mission accomplishment by the whole force.

1303. **Pre-mission Planning.** Prior to departing on a combat air operation, the air mission commander will brief the aircrews on the downed aircraft procedures. Information that will be discussed includes:

a. The location of RV points for downed aircrews.

b. Procedures for providing assistance for downed aircraft.

c. Identification, SAR procedures.

d. Identify on-call supporting units that will provide aircraft recovery and security for the downed aircraft.

e. Procedures for destruction of downed aircraft and equipment to prevent enemy capture.

1304. **Procedures.** The procedures used in the recovery of downed helicopters are based on the location of the helicopter, the capability of the enemy to hinder recovery operations, and the capability of the aerial force to recover the downed helicopter. In the division rear area, the enemy has little influence on the recovery; therefore defensive recovery procedures may not be required. If the downed helicopter is near the Forward Line of Own Troops (FLOT), or in an area where there is no established FLOT, the enemy has the capability to influence the recovery; therefore defensive recovery procedures must be used. The most difficult area in which to recover a downed aircraft is within enemy-held terrain. The recovery procedure over enemy terrain may also require the suppression of enemy ground forces. If recovery teams and equipment are available, and can act immediately, the recovery is more likely to be accomplished. All of the actions listed may not be required during the recovery operation. Each action must be carefully evaluated to determine the most effective procedure for the situation. Aviation units must pre-plan the recovery procedure for

each situation and be prepared to execute the plan quickly. The following are actions that may be required in the event of a downed helicopter:

a. **The Mission Commander should:**

(1) Determine the extent of damage and/or injuries through direct communication or reconnoitring.

(2) Report situation and location and request deployment of battle damage repair team to the down site or request assistance as the situation dictates.

(3) Attempt evacuation of personnel only if it does not degrade mission accomplishment nor endanger the recovery aircraft.

(4) When required, request and assist in the control of suppressive fires.

(5) Advise downed aircrew of action to be taken and continue the mission.

b. **The Aircraft Commander of the downed helicopter should:**

(1) Administer first aid as necessary.

(2) If possible, report the situation to the air mission commander.

(3) If capture of the aircraft by the enemy is likely, prepare it and all sensitive equipment for destruction.

(4) Employ survival radio/locator and visual signalling devices to aid in locating downed aircrew.

(5) Establish defensive positions around the recovery site.

(6) If not immediately evacuated, proceed to pre-planned pick-up point or follow pre-planned escape and evasion plan.

(7) Assist as necessary in battle damage repair actions and in evacuation of the aircraft/personnel from the down site.

c. **Actions by the Owning Unit.** The controlling headquarters of the downed aircraft should be prepared to accomplish the following actions upon notification if the tactical situation permits:

(1) Arrange for appropriate forces to provide security for the downed aircrew and helicopter.

(2) Dispatch battle damage repair team and equipment to the down site to recover the helicopter.

(3) Based on the battle damage repair team assessment, and the tactical situation, initiate one of the following actions:

(a) Complete repairs necessary to fly the helicopter for return to action.

(b) Apply temporary repairs to allow a one-time flight from the down site to a repair facility.

(c) Perform airlift recovery of the downed helicopter.

(d) Cannibalise critical, and easy to remove, components and destroy the helicopter.

(4) When aircraft cannot be recovered, authorise the aircraft to be destroyed.

1305. **Reports.** Reports of downed aircraft should be concise, accurate, and include:

a. Identification.

b. Location and time of incident.

c. Total personnel aboard/injured and extent of injury.

d. Estimate of aircraft damage (total, major, minor).

e. Existence of evidence of chemical contamination.

f. Enemy situation to include the AD threat.

g. Accessibility of downed helicopter.

h. Intentions.

i. Person/unit reporting downed aircraft.

CHAPTER 14 - AERIAL RECOVERY EQUIPMENT AND TECHNIQUES FOR HELICOPTERS

(STANAG 2970 HIS)

Related Publications:

STANAG 2407 HIS	Helicopter Battle Damage Assessment and Repair.
STANAG 3542 HIS	Technical Criteria for the Transport of Cargo by Helicopter.

1401. **Aim.** The aim of this chapter is to provide standardised equipment performance requirements and recovery techniques to allow member nations to lift downed helicopters and light fixed-wing aircraft from remote or inaccessible sites.

1402. **Application.** The criteria established by the following paragraphs will apply in the selection of hardware and methods for aerial recovery of aircraft. Participating nations further agree to furnish verified rigging procedures at the so that any nation may carry out aerial recovery of the downed aircraft.

1403. **Background.** Aerial recovery is one of three options in dealing with a downed aircraft, similar in concept to medical triage. After assessment of the damage to a downed aircraft by a qualified technician from the owning nation the aircraft can either be:

a. Repaired to fly away (see STANAG 2407).

b. Recovered by air to a safer location for repair (the subject of this STANAG).

c. Cannibalised for spares then destroyed.

1404. **General Requirements.** Aerial recovery equipment and techniques are selected and provided for the purpose of recovery of NATO Forces' aircraft and shall have the capability of being able to recover and evacuate disabled aircraft as quickly and safely as possible. Aerial recovery techniques shall include procedures such as preparing the aircraft for movement, connecting it to a suitable helicopter with the sling/strop, and transporting it to a maintenance area. All national equipment required to perform recovery operations shall be identified and maintained to ensure immediate availability. Verified rigging procedures for the downed aircraft will be provided by either being carried in documents that fly with the aircraft or being brought to the scene by the technical inspector from the owning nation who performs the ‘triage’ outlined above.

1405. **Detailed Requirements:**

a. **Rigging Procedures.** Verified rigging procedures shall be established for

each NATO aircraft designed for aerial recovery. Verification may be by prior successful use or by structural analysis of the aircraft lift provisions, load analysis of all lifting components and a flight demonstration of the representative airframe. Rigging should be such as to produce an attitude for the recovered aircraft that is stable in forward flight. Appropriate devices must be provided to protect both the airframe and the lifting devices from damage in flight.

b. **Equipment.** The above techniques for aerial recovery can be accomplished using numerous types and combinations of equipment, providing that connecting interfaces and performance characteristics are compatible. The equipment must provide safe restraint and in-flight suspension of the aircraft to be recovered or evacuated. The equipment required for an aircraft recovery will depend on the type of aircraft to be recovered, its weight, the extent of structural damage and the rigging procedures to be used. The following type of devices will normally allow a variety of aircraft to be recovered with little or no additional damage to the aircraft to be recovered:

(1) **Pendant/Strop Assembly.** A pendant or strop is normally required to ensure adequate separation between the recovery helicopter and the aircraft being recovered. Dual pendants may also be used to reduce the lateral angle on fore and aft support legs or for tandem hook riggings. Pendants/strops can also be used to facilitate hook-up operations.

(2) **Sling Leg.** Adjustable sling legs should be provided to allow the recovered aircraft to be rigged at the proper attitude (normally slightly nose down) for the best stability at flight speeds. Chain and grab hook arrangements provide a suitable leg adjustment provided the grab hook or grab link is equipped with a suitable keeper. Depending on the rigging arrangement, the sling legs can be connected directly to the aircraft lift fittings or to a spreader bar that is connected to additional sling legs or fuselage support bands.

(3) **Spreader Bars.** Spreader bars may be required to ensure sling legs clear the airframe, engines, suppressers, etc. when fuselage lift fittings are located at the places other than the rotor or top of the fuselage. When recovering larger aircraft with fuselage support bands, spreader bars may be positioned across the fuselage. The length of spreader bars should be at least equal to the fuselage width to reduce the crushing forces on the side of the fuselage. For smaller aircraft, the spreader bar can be used aligned with the centreline of the fuselage and connected to support bands. This arrangement controls the spread of the support bands and allows for correcting the attitude of the recovered aircraft by adjusting the legs above the spreader bar.

(4) **Fuselage Support Bands.** Fuselage support bands must be used when adequate lift provisions are not available or their structural integrity is questionable due to the crash. When support bands are used care must be taken in placing and securing them in locations which will not result in additional damage to the aircraft. The following additional equipment is required when fuselage support bands are used:

(a) **Load Spreaders.** Load spreaders are required for those aircraft where structural airframe members do not coincide with the required fuselage support band rigging stations. They are then used to distribute the fuselage support band load over a larger area, allowing more freedom in selecting rigging locations and reducing the risk of further structural damage to the disabled aircraft. Means must be provided for securing the support bands to the load spreaders.

(b) **Positioning Straps.** Adjustable length straps with quick connect attachment hooks at each end or other suitable securing device should be provided to secure either the fuselage support bands or the load spreader and support bands to prevent slippage of the support bands from their proper position on the aircraft fuselage.

(c) **Anti-chafe Pads.** These pads are used in areas where support bands would normally contact the fuselage to minimise the risk of abrasion.

(5) **Rotor Head Sling.** Rotor head slings are used for hoisting helicopters with two bladed rotors by forming basket configurations at the grip assembly of each rotor blade. This method may be used in lieu of fuselage bands when other hoisting provisions are inadequate; however, some damage to rotor controls may occur. This method should not be used for hoisting mission ready aircraft, i.e. seafaring operations. For those helicopters where rotor head lifting eyes or speciality type lifting slings are provisioned, these should be used in preference to fuselage bands, and may be used for mission ready aircraft.

(6) **Gust Locks.** These plates are used to secure control surfaces, such as, ailerons, elevators, and flaps that may influence the stability of slung fixed wing aircraft.

(7) **Spoiler.** Metal angles or other devices should be attached to all wings or other aerofoils to minimise the aerodynamic lift of these surfaces. This lift can cause dangerous instability at normal recovery flight

speeds.

(8) **Drogue Chutes.** Drogue chutes may be used to maintain directional stability for the slung aircraft when other methods, such as, attitude adjustments or use of tandem hook rigging configurations are not successful in providing a stable load. Drogue chutes should be no larger than required to maintain directional stability. A 1.5 to 2.0 metre diameter chute is adequate for most aircraft. All drogue chutes should be equipped with a swivel attachment to prevent the chute from winding up due to down wash.

(9) **Static Discharge Probe.** A device should be provided to ground the static charge from the recovery helicopter prior to hook-up.

(10) **Handling Lines.** Handling lines may be fitted to fuselage attachment points to assist in guiding the aircraft from and on to the ground.

c. **Types of Mission.** The primary purpose of aerial recovery is to transport downed aircraft from remote or inaccessible sites without incurring additional damage to the airframe. Other missions are the transportation of repairable airframes from advance/forward areas to rear repair facilities and to expedite loading or off-loading of aircraft from offshore ships during seafaring operations.

d. **Environmental Conditions.** Aerial recovery equipment and procedures should be capable of use in worldwide environments in the temperature range -40° C to +66°C (-40°F to +150°F). Operations should be possible at varied types of crash sites, including wooded hills, steep gravel slopes, deep snow, frozen soil, thick ice, and desert sand.

e. **Interface.** The pendant/strop should be compatible with the helicopter cargo hook. Standard interface dimensions have been published in STANAG 3542.

CHAPTER 15 - PROCEDURES FOR MARSHALLING HELICOPTERS IN LAND OPERATIONS

1501. **Aim.** The aim of this chapter is to standardise procedures for use by marshallers/guides directing ground movements of helicopter in land operations.

1502. **General:**

a. This chapter is intended to adopt a common procedure for contact between marshallers/guides and helicopters approaching a landing site in order to load or unload personnel and/or material and a common procedure for guiding each helicopter with a minimum delay to its selected landing point. It is recommended that, where feasible, the supported and the supporting units liaise before conducting marshalling operations.

b. The marshallers are to have knowledge of the applicable marshalling signals (see Annex 15A). They should also be made aware that some helicopter crews that have their own crewmen may assume responsibility for manoeuvre clearance to the load. However, this does not relieve the marshallers of their responsibilities for maintaining safety lookout clearance. Aviation units should, prior to the commencement of a task, advise ground units of the possibility that they may assume their own manoeuvre clearance.

1503. **Terms and Definitions.** The terms Load Control Group, Hook-up Man and Marshaller used in this section are defined in the Glossary.

1504. **Procedures:**

a. **Internal Loads:**

(1) One marshaller may be required for each landing point, depending on the number of aircraft to be controlled, the separation between aircraft, and the distance between landing points.

(2) The marshaller will be briefed on the procedure to be used at the landing points by the leader of the load control group.

(3) Before the arrival of the helicopters, the marshaller is to move to a safe point near the desired landing point, which enables him to look into the direction of the approaching helicopter (Figure 15-I).

(4) Pre-arranged signals may be used after contact has been established between the appropriate control group and the helicopter unit(s).

(5) Marshallers should ensure safe clearance and operation conditions between aircraft when directing an aircraft to its designated landing point.

(6) The marshaller shall remain in view of the pilot when directing the movement of the aircraft. When handover to another marshaller is required, the initial marshaller will not direct his attention away from the aircraft until positive control by the second marshaller is attained.

(7) Upon completion of loading, the aircrew will signal the marshaller that the aircraft is ready for movement.

b. **External Loads:**

(1) A marshaller and at least one hook-up man should be provided for each helicopter when attaching external loads.

(2) The hook-up man is to ensure the discharge of the static electricity of the helicopter before attaching the load. The marshaller is to position himself in sight of the helicopter pilot and is to direct the helicopter over the load until the hook-up man has attached the external load (see Figure 15-I).

(3) After the hooking-up of the load, the marshaller indicates to the pilot that the load is attached. The hook-up man is to ensure that the hook is properly closed and guide the slings until the slack is taken up to ensure that they do not foul the load.

(4) When the slings are seen to be taut and correctly fitted, the hook-up man is to clear to a safe distance (about 20 m) to the side of the helicopter). When the load is clear of the ground and the marshaller is satisfied that it is secure and properly suspended he is to give an ‘affirmative’ signal to the pilot (see Annex 15A, Signal 1).

c. **Night Operations:**

(1) When possible, the marshallers should walk the landing site during the day prior to conducting night operations.

(2) Lighting devices will be required by the marshaller to display the signals to the aircrew. The intensity of these lights will vary, depending on the means of vision (e.g. unaided or night vision devices) used by the aircrew.

(3) Additional reference lighting for external load operations will be provided when requested.

d. **Marshalling:**

(1) **Supported Unit.** The responsibilities of the supported unit are as follows:

(a) Provide specially trained personnel to marshal helicopters to their landing points for the pick-up and release of external loads. Whenever practicable, these personnel are to be equipped with distinctly coloured clothing, such as fluorescent international orange or yellow.

(b) Use marshalling signals as shown in Annex 15A.

(c) Position marshallers and hook-up personnel as shown in Figure 15-I.

(d) Restrict the presence of personnel in the danger area around the helicopter to those directly involved in the marshalling, loading, hook-up, or release of cargo.

(e) When conducting hook-ups at night, equip ground personnel with a night lighting device. The intensity of this light will vary, depending on the means of vision (e.g. unaided or night vision devices) used by the aircrew.

(f) Aid the pilot in hooking-up loads at night. Additional lighting may be requested by the helicopter unit.

(2) **Helicopter Unit.** The helicopter unit may issue special instructions on hook-up procedures if necessary.

e. **Emergencies.** In case of emergency the helicopter may need to land quickly, avoiding the load. The aircraft will normally attempt to land to the left of the load; consequently, the hook-up man should clear to the right as soon as possible, as shown in Figure 15-I.

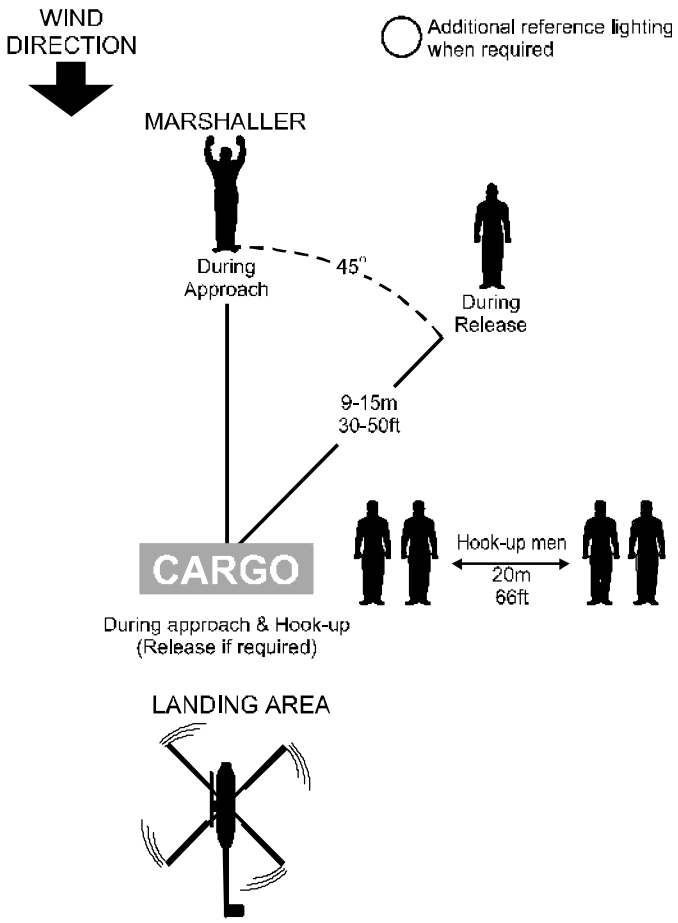

Figure 15-I: Position of Helicopter Marshallers and Hook-up/ Release Personnel

ANNEX 15A - GENERAL MARSHALLING SIGNALS FOR ALL AIRCRAFT

(Signal numbers conform to STANAG 3117)

1. **AFFIRMATIVE (I WILL COMPLY OR I UNDERSTAND)** **DAY:** Hand raised, thumb up **NIGHT:** Same as day signal with wand held as extension of the arm. **AIRCREW:** One Flash. **CONFORMS TO ICAO SIGNAL - 'ALL CLEAR'**	 **A-1**
2. **NEGATIVE (NOT CLEAR OR I WILL NOT COMPLY)** **DAY:** Arm held out, hand below waist level, thumb turned downward. **NIGHT:** Same as day signal with wand held pointing down. **AIRCREW:** Steady light. **NO ICAO SIGNAL**	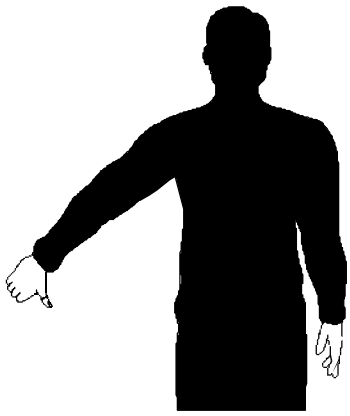 **A-2**
3. **THIS WAY** **DAY:** Arms above head in vertical position with palms facing inward. **NIGHT:** Same as day signal with wands held vertically and held as extension of the arms.	

CONFORMS TO ICAO SIGNAL	**A-3**
4. **PROCEED TO NEXT MARSHALLER** **DAY:** Right or left arm down, other arm moved across the body and extended to indicate direction to next marshaller. **NIGHT:** Same as day signal with wands held as an extension of the arms. **CONFORMS TO ICAO SIGNAL**	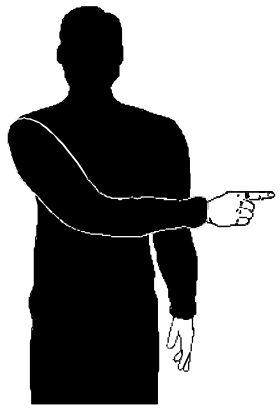 **A-4**
5. **SLOW DOWN** **DAY:** Arms down with palms toward ground, then moved up and down several times. **NIGHT:** Same as day signal with wands held horizontally. **CONFORMS TO ICAO SIGNAL**	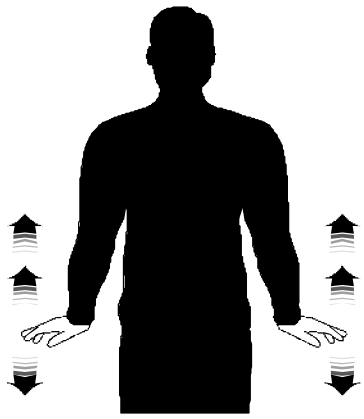 **A-5**
6. **TURN TO LEFT** **DAY:** Point right arm downward, left arm repeatedly moved upward and backward. Speed of arm movement indicating rate of turn. **NIGHT:** Same as day signal with wands held as extension of the arms. ***NOTE: Signals A-6 & A-7 are used for spot turns for hovering aircraft**	

CONFORMS TO ICAO SIGNAL	**A-6**
7. **TURN TO RIGHT** **DAY:** Point left arm downward, right hand repeatedly moved upward and backward. Speed of arm movement indicating rate of turn. **NIGHT:** Same as day signal with wands held as extension of arms. ***NOTE: Signals A-6 & A-7 are used for spot turns for hovering aircraft** **CONFORMS TO ICAO SIGNAL**	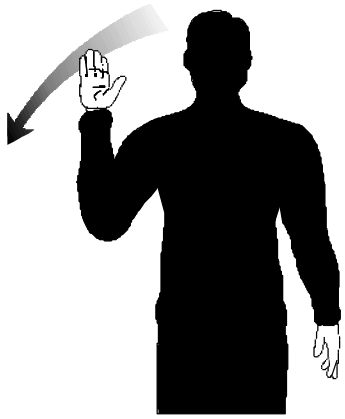 **A-7**
8. **MOVE AHEAD** **DAY:** Arms a little apart, palms facing backwards and repeatedly moved upward-backward from shoulder height. **NIGHT:** Same as day signal with wands held as extension of arms. **CONFORMS TO ICAO SIGNAL**	 **A-8**
9. **BRAKES** **'ON' DAY:** Arms above head, open palms and fingers raised with palms toward aircraft then fist closed. **'ON' NIGHT:** Arms above head then wands crossed. **'OFF' DAY:** Reverse of above. **'OFF' NIGHT:** Cross wands, then uncrossed.	

CONFORMS TO ICAO SIGNAL	 **A-9**
10. **STOP** **DAY:** Arms crossed above the head palms facing forward. **NIGHT:** Same as day signal with wands held as extension of arms. **CONFORMS TO ICAO SIGNAL**	 **A-10**
11. **MOVE BACK (ALSO USED TO PULL AIRCRAFT UTILISING ARRESTING WIRE)** **DAY:** Arms by sides, palms facing forward, swept and upward repeatedly to shoulder height. **NIGHT:** Same as day signal with wands held as extension of the arms. **CONFORMS TO ICAO SIGNAL**	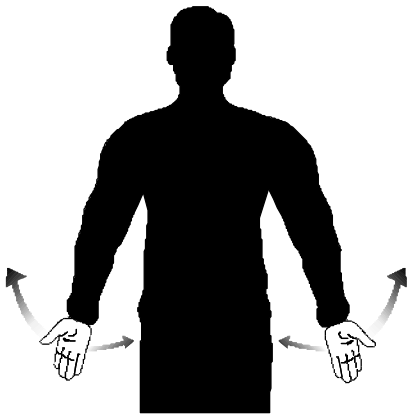 **A-11**

12. **TURNS WHILE BACKING** **TAIL TO LEFT** **DAY:** Point right arm down and left arm brought from overhead vertical position to horizontal position, repeating left arm movement. **NIGHT:** Same as day signal with wands held as extension of arms. **CONFORMS TO ICAO SIGNAL**	 **A-12**
13. **TURNS WHILE BACKING** **TAIL TO RIGHT** **DAY:** Point left arm down and right brought from overhead, vertical position to horizontal forward position, repeating right arm movement. **NIGHT:** Same as day signal with wands held as extension of the arms. **CONFORMS TO ICAO SIGNAL**	 **A-13**
14. **REQUEST/CLEARANCE FOR PERSONNEL TO APPROACH AIRCRAFT** **DAY:** A beckoning motion with either hand at eye level. **NIGHT:** A continuously flashing light.	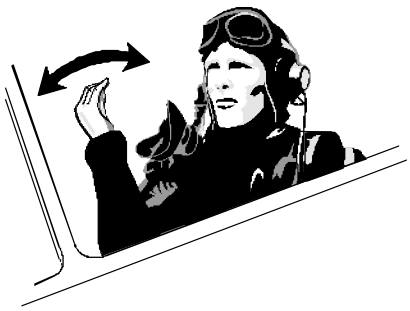 **A-14**

CONFORMS TO ICAO SIGNAL	
15. **REQUEST BY MARSHALLER TO MOVE PERSONNEL TOWARD AIRCRAFT** **DAY:** Left hand raised vertically overhead, palm towards aircraft. The other hand lowered, palm facing inwards. **NIGHT:** Same as day signal but only the raised wand illuminated and flashing. **NO ICAO SIGNAL**	 **A-15**

16. **PERSONNEL APPROACH THE AIRCRAFT** **DAY:** Either hand raised vertically overhead, palm toward aircraft. The other hand indicated to personnel concerned and gestures toward aircraft. **NIGHT:** Same as day signal with wands held as extension of arms. **CONFORMS TO ICAO SIGNAL**	 **A-16**
17. **INSERT CHOCKS** **DAY:** Arms down, fists closed, thumbs extended inwards, swing arms from extended position inwards. **NIGHT:** Same as day signal with wands held as extension of arms. **CONFORMS TO ICAO SIGNAL**	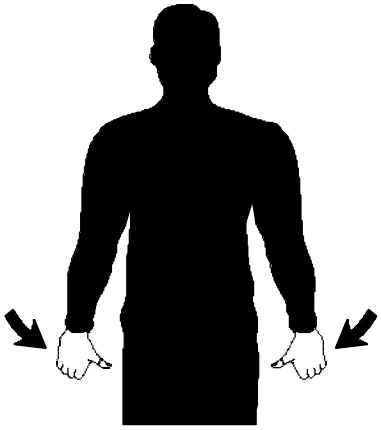 **A-17**
18. **REMOVE CHOCKS** **DAY:** Arms down, fists closed, thumbs extended outwards, swing arms outwards. **NIGHT:** Same as day signal with wands held as extension of arms. **CONFORMS TO ICAO SIGNAL**	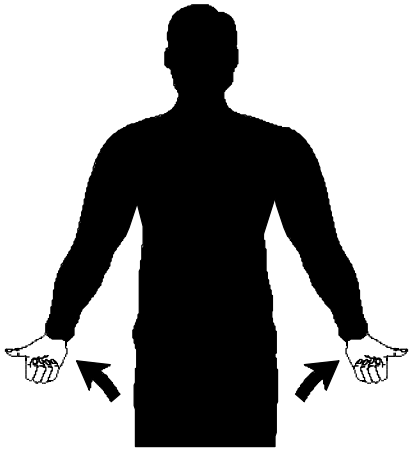 **A-18**

19. **DOWN LOCKS/UNDERCARRIAGE PINS INSTALL** **DAY:** Left arm bent vertically in front with fist clenched, right arm bent horizontally in front with fist clenched and held motionless at left elbow. **NIGHT:** Same as day with addition of wands. perpendicular to aircraft. **NO ICAO SIGNAL**	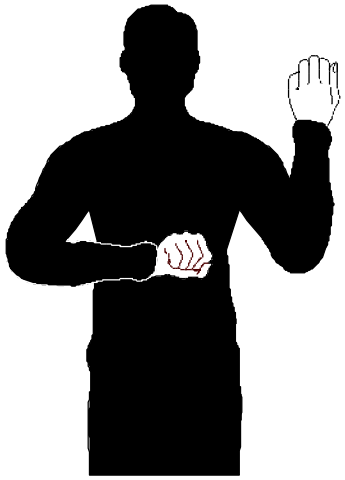 **A-19**
20. **DOWN LOCKS/UNDERCARRIAGE PINS REMOVE** **DAY:** Left arm bent vertically in front with fist clenched, right arm bent horizontally in front with fist clenched at left elbow. Right fist moves horizontally away from left elbow. **NIGHT:** Same as day with addition of wands. **NO ICAO SIGNAL**	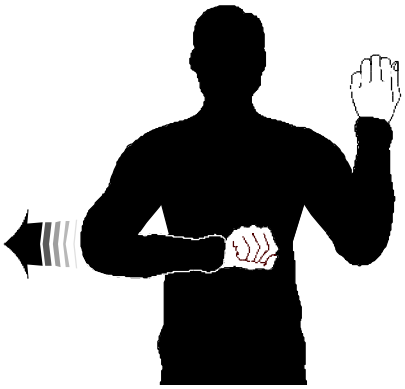 **A-20**
21. **GROUND ELECTRICAL POWER SUPPLY INSERT** **DAY:** Hands above head, left fist partially clenches, right hand moved in direction of left hand with first two fingers extended and inserted into circle made by fingers of the left hand. **NIGHT:** Same as day signal with left wand held vertical and right wand held horizontal. **NO ICAO SIGNAL**	 **A-21**

22. **GROUND ELECTRICAL POWER SUPPLY DISCONNECT** **DAY:** Hands above head, left fist partially clenched, right hand moved away from left hand withdrawing first two fingers from circle made by fingers of the left hand. **NIGHT:** Same as day signal with left wand held vertical and right wand held horizontal. **NO ICAO SIGNAL**	 **A-22**
23. **EXTERNAL AIR SUPPLY CONNECT** **DAY:** With hands above head, left hand cupped, right fist clenched and moved in direction of left hand and inserted into cup made by left hand. **NIGHT:** Same as day signal with wands held vertical. **NO ICAO SIGNAL**	 **A-23**
24. **EXTERNAL AIR SUPPLY DISCONNECT** **DAY:** Hands above head, left hand cupped, right fist clenched and moved away from left hand withdrawing fist from cup made by left hand. **NIGHT:** Same as day signal with wands held vertical.	

NO ICAO SIGNAL	**A-24**
25. **START ENGINE(S)** **DAY:** Left hand overhead with appropriate number of fingers extended to indicate the number of the engine to be started, and circular motion of right hand at head level. **NIGHT:** Similar to the day signal except the wand in the left hand will be flashed to indicate the engine to be started. **CONFORMS TO ICAO SIGNAL**	 **A-25**
26. **SLOW DOWN ENGINE(S) ON INDICATED SIDE** **DAY:** Arms down, with either right or left arm moved up or down, palm facing down, indicating that left or right side engines respectively should be slowed down. **NIGHT:** Same as day signal with one wand moved horizontal to ground. **CONFORMS TO ICAO SIGNAL**	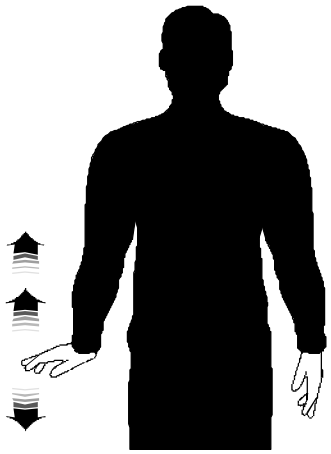 **A-26**
27. **CUT ENGINES** **DAY:** Either arm and hand, level with shoulder, with hand moving across throat palm down. **NIGHT:** Same as the day signal with wands held as extension of arms.	

CONFORMS TO ICAO SIGNAL	 **A-27**
28. **FIRE** **DAY:** Make rapid horizontal figure of eight motion at waist level with either arm, pointing at source of fire with the other. **NIGHT:** Same as day signal with wands held as extension of arms. **CONFORMS TO ICAO SIGNAL**	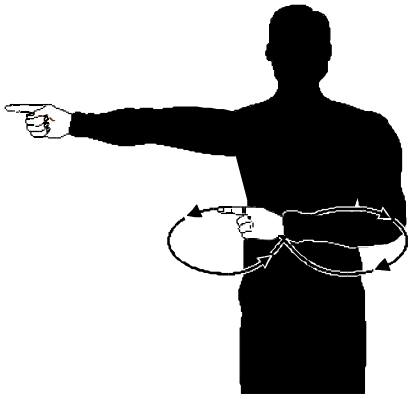 **A-28**
29. **TAILWHEEL LOCK** **DAY:** Wrists together overhead, opened to form in a V, then closed suddenly. **NIGHT:** Same as day signal with wands used as extension of hands. **NO ICAO SIGNAL**	 **A-29**

30. **TAILWHEEL LOCK** **DAY:** Hands overhead, palms together then hands opened from the wrist to form a V, wrists remaining together. **NIGHT:** Same as day signal with wands held as extension of hands. **NO ICAO SIGNAL**	 **A-30**
31. **FOLD WING/HELICOPTER BLADES** **DAY:** Arms straight out at sides, then swept forward and hugged around shoulders. **NIGHT:** Same as day signal with wands held as extension of arms. **NO ICAO SIGNAL**	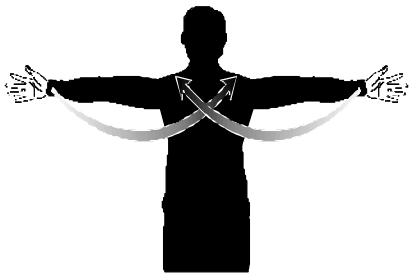 **A-31**
32. **SPREAD WINGS/HELICOPTER BLADES** **DAY:** Arms hugged around shoulders then swept straight out to the sides. Hold signal until wings/blades are locked, then give affirmative signal. **NIGHT:** Same as day signal with wands held as extension of arms. **NO ICAO SIGNAL**	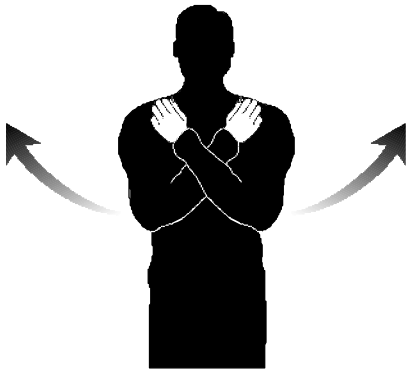 **A-32**

33. **ENGAGE NOSEWHEEL STEERING** **DAY:** Point to nose with index finger while indicating direction of turn with other index finger. **NIGHT:** Same as day signal with wands held as extension of hands. **NO ICAO SIGNAL**	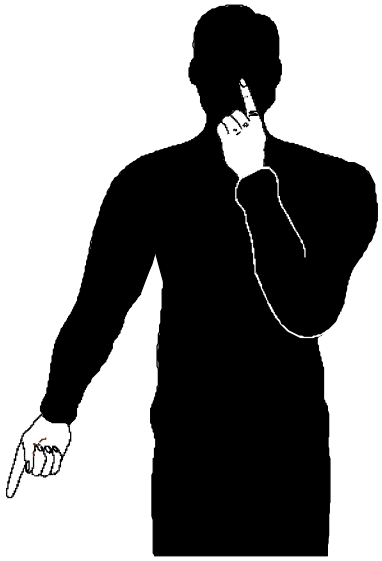 **A-33**
34. **DISENGAGE NOSEWHEEL STEERING** **DAY:** Point to nose with index finger, lateral wave with open palm of other hand at shoulder height. **NIGHT:** Same as day signal with wands held as extension of arms. **NO ICAO SIGNAL**	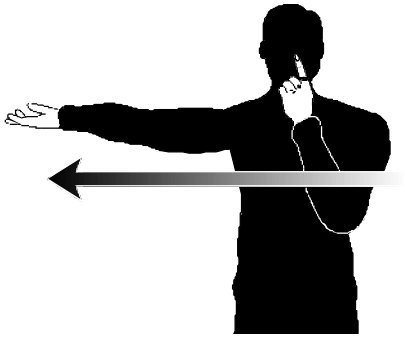 **A-34**
35. **ABANDON AIRCRAFT** **DAY:** Simulate unfastening seat belt and shoulder straps and throwing them up and off. **NIGHT:** Same as day signal with wands held as extension of arms.	

NO ICAO SIGNAL	**A-35**
36. **HOT BRAKES** **DAY:** Arms extended with forearms perpendicular to the ground palms facing inward. **NIGHT:** Same as day signal with wands held as extension of arms. **NO ICAO SIGNAL**	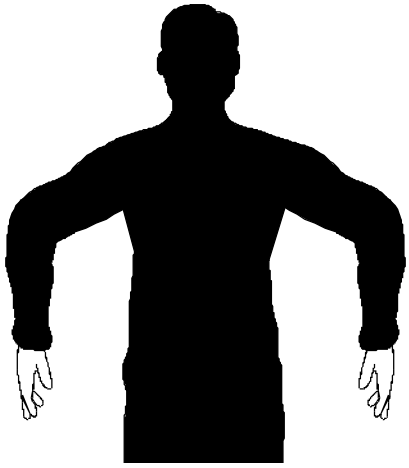 **A-36**

CHAPTER 16 - HELICOPTER TACTICAL REFUELLING

Related Publication:

STANAG 2947 SILCEP Technical Criteria for a Closed-Circuit Refuelling System.

1601. **Aim.** The aim of this chapter is to standardise refuelling procedures for rotary-wing aircraft in a tactical environment.

1602. **Application.** The purpose of tactical refuelling is to provide a safe, expeditious means of refuelling helicopters normally carried out away from a fixed facility during operations. There is an essential requirement that data on the compatibility of fuels, equipment, and procedures be readily available to member nations for effective employment of helicopters during tactical operations. It is recognised that member nations have in use a wide variety of helicopters and equipment that must be considered when implementing these procedures.

1603. **Responsibilities:**

a. The supported force unit, in co-ordination with the supporting aviation unit, will arrange the following:

(1) POL products (based on previous co-ordination).

(2) Sites for refuelling.

(3) Security of POL products, associated equipment, and personnel.

(4) Fire fighting facilities.

(5) Disposal of waste fuel.

b. Where it is necessary to pre-stock forward areas to provide helicopter refuelling points, the supported force commander should arrange, through the appropriate logistic command, for the delivery of fuel to the refuelling points and for the equipment and personnel necessary to pump the fuel. The supporting unit and helicopter crew are responsible for supervising the safe refuelling of the aircraft. In this effort, the helicopter unit commander will make recommendations to the supported ground force commander regarding the required time, place and quantity of fuel.

1604. **Compatibility of Equipment.** Numerous types and combinations of equipment can be used for Tactical refuelling. Although compatibility of equipment does not exist between all member nations, six basic items are necessary:

a. Fuel reservoir.

b. Fuel pump.

c. Filter water separator.

d. Flexible hose.

e. Fuel nozzles for open and pressure refuel.

f. Bonding and grounding (earthing).

1605. **Refuelling:**

a. Two methods of refuelling are normally used:

(1) **Normal Refuelling.** Normal refuelling is a means of refuelling helicopters with engines and all systems not related to refuelling inactive, and the aircraft vacated by all personnel.

(2) **Rapid Refuelling.** Rapid refuelling is a means of refuelling helicopters with engines running and rotor(s) running or stopped. Non-essential systems are switched off and, where possible, all passengers dismounted from the helicopter before refuelling is commenced. This method requires positive ground control of the aircraft movement, standardised refuelling equipment and techniques, and co-ordination between refuelling personnel and aircraft crews.

b. Both methods of refuelling can utilise open or closed circuit refuelling systems. Due to safety considerations when conducting rapid refuelling, closed circuit refuelling is the preferred method.

c. In-flight refuelling may be used as tactically required.

1606. **Tactical Refuelling Procedures.** The following factors should be considered when producing unit refuelling SOPs or regulations:

a. The need to adhere strictly to fire precautions and safety procedures, including the use of mobile fire-fighting equipment.

b. Refuelling points should conform to the prescribed requirements of landing areas for day and night operations.

c. The best disposition of landing points should be provided to accommodate the type and numbers of helicopters to be refuelled.

d. Whenever possible a thorough briefing should be given to all crews prior to refuelling.

e. Visual or Radio Telecommunications (RT) inter-communication is to be maintained throughout the refuelling operation. No outside radio transmissions should be made while refuelling.

f. Individual responsibilities and delineation of tasks are to be clearly defined.

g. When collocated with an arming point, protection should be given against the danger of inadvertent detonation of one class of supply by another.

h. When required, a safe disarming area should be designated for malfunctioning helicopter weapon systems.

i. An adequate water source to rinse the clothing and skin of personnel saturated by a fuel spill should be provided.

j. When conducting tactical refuelling at night, servicing personnel should use lighting devices that will not degrade the aircrew's unaided or aided vision.

k. Procedures should be applied for the marking of those LS used during night operations, taking account of night vision devices when employed.

CHAPTER 17 - CROSS-SERVICING OF HELICOPTERS

Related Publications:

STANAG 3113 ASSE	Provision of Support to Visiting Personnel, Aircraft and Vehicles.
STANAG 3430 ASSE	Responsibilities for Aircraft Cross-servicing.

1701. **Aim.** The aim of this chapter is to define the requirements of and responsibilities for cross-servicing helicopters in multi-national land operations so that existing capabilities can be fully used. For helicopters other than those engaged in land operations, see STANAG 3430.

1702. **Definition.** For the purpose of this chapter the term 'Cross-servicing of Helicopters Engaged in Land Operations' means the provision of personnel, equipment, and consumable supplies by one nation, at a field site, to assist the aircrew of another nation in preparing its aircraft for further commitment.

1703. **Principles.** Helicopter cross-servicing will be provided on a temporary, local basis to helicopters of allied nations that are deployed without organic ground elements and that must be committed rapidly to maintain the momentum of operations. Helicopter cross-servicing is based on the following principles:

a. Helicopters engaged in land operations will normally be cross-serviced locally on a temporary basis.

b. Other nations' helicopters will be serviced without specific logistic preparation to the extent allowed by the task of the host helicopter unit. This servicing will be provided from the facilities and stocks available for helicopters of the host unit.

c. Cross-servicing that exceeds the capacity of the host helicopter units will require additional logistic activity by and consultation between the commands concerned.

d. The organisation to which the helicopter is assigned may be charged for services rendered. STANAG 3113 outlines the procedures that permit reimbursement for these services.

1704. **Compatibility.** Member nations have in use a wide variety of helicopters, weapons and equipment that must be considered when implementing this chapter. Member nations must know the compatibility of fuels, lubricants, weapons, and equipment so they can use existing capabilities and plan for any additional logistic support.

1705. **Responsibilities:**

a. Co-ordination between the visiting and host units should be initiated as early as possible.

b. Consistent with resources available in excess of its own immediate requirements, the host unit shall provide:

(1) Personnel and equipment[1 2 3] to assist the aircrew in:

(a) Re-arming.

(b) Refuelling (see also Chapter 14).

(c) Ground movement and camouflage of helicopters.

(d) Guarding of helicopters.

(e) Battle Damage Repair (BDR)[4].

(2) POL, hydraulic fluids, compressed air and nitrogen.

(3) Munitions/missiles.

(4) The same service support is provided to organic aircraft if equipped with the same type and series. Such servicing shall include:

(a) Furnishing personnel to perform appropriate inspections in accordance with the visiting unit's inspection checklist.

(b) Performing minor repairs within the host unit's capability.

c. The visiting unit shall:

(1) Establish timely liaison with the host unit.

(2) Provide appropriate refuelling adapters, if required.

(3) Provide the appropriate cross-servicing guide to the host unit, if required.

---

[1] Usually, the assisting ground crew will have no special qualification to handle the type of helicopter to be serviced.
[2] Safety pins (for items requiring them) shall be carried in helicopters on all flights.
[3] Rotor blade tie-downs shall be carried in helicopters that require the rotor blades to be tied down after flight.
[4] In this context BDR is that repair to allow for a one time flight to a maintenance facility.

(4) Be responsible for any necessary inspections and supervision of re-arming and replenishing their aircraft.

d. In all cross-servicing operations, the helicopter commander shall bear full responsibility for the cross-servicing actions performed on his helicopter. This responsibility includes adequate briefing and supervision of ground crew on their specific duties.

1706. **Cross-servicing Guides.** Cross-servicing guides shall be prepared for each type of helicopter declared cross-serviceable. These guides shall:

a. Contain sufficient information to perform the necessary cross-servicing.

b. Be issued in English or French, and by bi-lateral agreement be translated into the language of the host nation.

c. Be prepared in accordance with Annex 17A.

d. Be kept current by the issuing nation. Changes shall be made by replacement of the complete guide.

e. Be used by the servicing nation to determine specific servicing materials required and correct procedures to be followed.

f. Be carried aboard the aircraft to be serviced.

1707. **Training.** Training for cross-servicing of helicopters shall be accomplished, where possible, through the exchange of fly-in familiarisation training by the helicopter units. Follow-on training may be conducted during field training exercises involving more than one nation.

1708. **Requirement for Cross-servicing of Helicopters.** The Operational Command will identify the helicopter types that need to be cross-serviced and the commands between which the cross-servicing is to be accomplished. These requirements will be passed to the appropriate national POC who will be responsible for:

a. Preparing and arranging for the distribution of Cross-servicing Guides.

b. Preparing and issuing any necessary national regulations and documentation required for cross-servicing of helicopters.

c. Exchanging information to facilitate the implementation of this chapter.

ANNEX 17A - FORMAT FOR THE PREPARATION OF CROSS-SERVICING GUIDES FOR HELICOPTERS

17A1. **Introduction.** In as much as the cross-servicing guide will be carried in the helicopter, it should be compact, contain only the necessary servicing and safety information, include as many illustrations as possible, and be constructed of loose-leaf laminated heavy paper to prevent destruction during normal use. These guides should be exchanged between nations to ensure familiarisation with other nations' helicopters.

17A2. **Preparation and Arrangement of Cross-Servicing Guides.** The cross-servicing guide should be divided into the following main parts and arranged in the following order:

Cover page.

Table of contents (back of cover page).

I. Helicopter description (to include illustrations and silhouettes.

II. Helicopter handling, camouflage and crash rescue.

III. Replenishment, servicing, emergency ground connection for engine starting.

IV. Armament systems (to include re-arming).

When a section does not apply, the section number and title followed by the words 'Not Applicable' should be used. The same information should be included in the table of contents. Each section should be complete so that it can be used with minimum reference to other sections.

17A3. **Cover Page.** The cover page should be provided and arranged as follows:

(Publication Number)
(Edition Number)

CROSS-SERVICING GUIDE
(Date)
FOR (type helicopter)
(Include model, series, and weapon systems)

17A4. **Table of Contents.** A table of contents should be provided. To ensure that the guide remains compact, the table of contents should be printed on the back of the cover page.

17A5. **Helicopter Description.** This section should provide the following:

a. Introductory paragraph.

b. General description and function of the helicopter.

c. Safety precautions.

d. Danger areas.

e. Access and inspection openings.

f. Interior arrangement for emergency shut-off of fuel and electrical sources.

g. Armament replenishment.

17A6. **Helicopter Handling and Crash Rescue.** This section should include the following information:

a. List of handling equipment.

b. Towing.

c. Blade folding procedures.

d. Emergency access and crew evacuation.

e. Fire-fighting.

f. Electrical/mechanical explosive devices.

g. Pilot-to-ground crew electronic communications.

h. Covers and camouflage.

17A7. **Replenishing, Servicing, and External Power Requirements**. This section should include the following information:

a. Servicing and drain points.

b. List of consumable materials, with acceptable and emergency alternatives, where applicable.

c. Position and types of servicing parts/receivers for replenishment.

d. Capacity of systems and method of replenishment or charging.

e. Aircraft marking, servicing, and precautions.

f. Lubrication charts and symbols.

g. External hydraulic power.

h. External electric power.

i. External pneumatic power.

j. Replenishment of aircraft installed fire extinguisher/system.

17A8. **Armament.** The armament section should include the following information:

a. Brief description of the armament system.

b. Ground crew safety procedures.

c. Post-flight safety procedures.

d. Description of loading procedures.

e. Stray voltage checks.

f. Pre-flight arming procedures.

g. Failed munition (missiles, rockets, and fixed ammunition) removal procedures.

CHAPTER 18 - HELICOPTER CONTAMINATION CONTROL

1801. **Introduction.** Successful helicopter operations in a hostile Nuclear, Biological and Chemical (NBC) environment are dependent on how contamination avoidance and control is performed. Commanders must be aware that contamination control procedures on helicopters may only reduce the hazard and not eliminate it altogether. Once a helicopter is contaminated, it is very difficult to decontaminate completely due to the various compounds used in its construction and the ability of NBC materials to intrude and penetrate these compounds, and the inner space of the helicopter generally. Contamination avoidance is the best way to deal with this hazard. Helicopter units need to have effective procedures that emphasise contamination avoidance. Should helicopter contamination occur then the priority changes from “avoidance” to “contamination control”. The objective of contamination control is to limit the spread of contamination primarily through decontamination. During decontamination operations the primary objective is to reduce the contamination hazard to the lowest possible level to enable a reduction in individual NBC protection and to prevent transfer of contamination. To ensure the least degradation of operational effectiveness, commanders will need to apply a risk management philosophy to all contamination control procedures. Protective states and measures must be consistent with the hazard facing helicopter operators and those directly affected by helicopter operations.

1802. **Aim.** The aim of this chapter is to provide commanders with general guidance and procedures on the contamination avoidance, contamination control, and decontamination of helicopters affected by nuclear fallout and biological or chemical agents, and toxic industrial hazards (TIH). It does not replace the guidance available from specialist NBC advisers.

1803. **Threat.** Helicopter operations may be threatened directly or indirectly by the use of NBC weapons. In addition to ‘conventional’ NBC materials, helicopters may be exposed to the hazard of contamination from a release other than attack as a result of the collateral damage of war fighting in the form of TIH such as low level radiation and toxic industrial chemicals. Dependent on the substance involved, large areas of terrain and the air immediately above may become contaminated with radioactive fallout dust, biological particles or liquid chemical or vapour and remain so for extended periods of time.

1804. **Contamination Avoidance.** This is the best method of dealing with this threat/risk. It includes those actions taken before an attack to protect resources from contamination and actions taken after an attack to mark and avoid contamination. Practice contamination avoidance at all times: on the ground, in the air, before NBC attacks, and around suspected contaminated payloads and areas. Contamination avoidance is critical due to the difficulty in decontamination. Aircrews must be aware of the hazards of NBC operations. For instance, an aircraft that hovers or lands in a contaminated area could transfer contamination onto itself. Likewise, contaminated

passengers or groundcrew pose a danger of transferring contaminants.

1805. **Contamination Control.** Contamination control are those actions taken after contamination is present to reduce the spread and amount of contamination on resources. These include such things as isolating known contaminated cargo or covering areas/equipment to reduce cross-contamination.

1806. **Decontamination.** During decontamination operations the primary objective is to reduce the contamination hazard to the lowest possible level. The principles of decontamination are to decontaminate:

a. **As Soon as Possible.** The sooner contamination is removed, the sooner you can reduce NBC protection levels through appropriate risk management measures and begin restoring combat power. This also reduces the sorbing risk. Scientific assessment of modern chemical agents requires that some are removed within 30 minutes to protect materials from their corrosive properties; however, due to the risk of perspex crazing, contamination on perspex should be removed within 10 minutes.

b. **Only What is Necessary (Operational Decontamination).** To survive and win on the contaminated battlefield, it is important not to waste precious resources decontaminating everything. Decontaminate only what is necessary to continue the mission.

c. **As Far Forward as Possible (limit the spread)**. Do not transport contaminated personnel and equipment away from the operational area if you can bring decontamination assets forward safely. This will keep the equipment on location, where it is needed, allow decontamination to begin earlier, and limit the transfer of contamination to other areas.

d. **Equipment and Personnel according to Operational Priorities**. Clean mission essential items first and non-essential items last.

1807. **Scenarios.** There are four possible scenario's by which helicopters may be exposed to contamination:

a. **Attack while on the Ground.** To minimise the effect of an attack, the following pre-attack precautions should be taken, when practicable, whenever the aircraft is shut down on the ground:

(1) Park close to and downwind of trees and buildings.

(2) Close doors and windows. If doors and windows have been removed then alternative materials such as chemical resistant material should be considered.

(3) Cover tyres and canopy/window perspex with chemical resistant material.

b. **Fly through Contamination.** Flight through liquid/particles falling to the ground is extremely unlikely but flight through a vapour hazard may take place. Aircrew and passengers should wear individual protection and, when possible, doors and windows should be closed. Close all non-NBC air vents, where this is practicable, as a measure against the ingress of NBC substances. If closure is not possible, some form, of external over-taping may be appropriate.

c. **Land on Contaminated Ground.** When landing a helicopter on contaminated ground or hovering close to it the re-circulation of spoil by the rotor wash will result in a significant spread of contamination to the aircraft, people, and area. It may even penetrate to the interior of the helicopter. Aircrew and passengers should wear individual protection and, when possible, doors and windows should be closed. Close all non-NBC air vents, where this is practicable, as a measure against the ingress of NBC substances. If closure is not possible, some form, of external over-taping may be appropriate.

d. **Carry Contaminated Cargo/Personnel**. The primary consideration when required to carry contaminated cargo/personnel is to employ contamination avoidance/control procedures to the maximum extent possible. Use of external loads should also be considered, when practical. Flying with doors and windows open will increase the rate of weathering if carrying contaminated troops. When having to carry contaminated personnel or cargo, personnel could undergo a suit change prior to emplaning and the cargo could be sealed in chemical agent resistant material. Protecting the floor with covers will aid subsequent decontamination but tears in the fabric could increase the risk of contamination behind floorboards and may present a flight safety hazard. Refer to “Sampler Checklist” for additional information on transporting contaminated cargo.

1808. **Planning.** As part of the planning process the commander should apply risk management philosophy and should assess the likely threat including the risk of exposure to contamination. He will seek to reduce the risk and maximise operational capability by determining levels of aircrew protection and establishing procedures for the decontamination of aircraft and equipment. Commanders should be aware that, depending on the extent of contamination, once any helicopter is contaminated by threat substances, it may take an unacceptable amount of resources, particularly time, to remove all contamination due to the intrusive and penetrative nature of the substances involved. During this decontamination, helicopters would not be supporting ground forces, their major role, which may be unacceptable. Consequently, commanders subject to national regulations may have to accept, in

the spirit of risk management philosophy, operating 'dirty' helicopters in the knowledge that the risk to crews and passengers has been reduced to acceptable levels by the application of timely NBC protection and contamination control measures. Personnel will require protection commensurate with the residual hazard. However, it must be recognised that any such 'fight dirty' posture will have a very finite life due to the extremely debilitating nature of operating helicopters in aircrew NBC ensembles. The following factors should be considered:

a. The time for which aircrew must wear protective ensembles.

b. The type of mission.

c. The capabilities of unit NBC personnel.

d. The external support available from NBC units.

e. The decontamination assistance available from the supported unit.

f. The support available to detached elements.

g. The designation of decontamination site.

h. Employ hazard avoidance whenever possible within the context of the mission.

i. Selection of optimum sites and landing techniques to minimise airframe and underslung load contamination.

j. Availability of a toxic free area.

k. The availability of NBC Warning and Report Information.

1809. **Detection.** Detection and alarm equipment will usually provide adequate warning of many NBC hazards to helicopter sites although it may take some time to assess the precise nature and likely duration of contamination. In the air, visual detection of certain liquid agents is possible using chemical detection paper attached to the windscreen of the aircraft and chemical alarms may also be fitted. Where adequate stand-off NBC detection technologies exist, not interfering with the payload of the aircraft, nations should seriously consider their employment as a means of advanced warning of NBC hazard to safeguard aircrews and their passengers.

a. On-board the Helicopter. NBC equipment may be used to detect, identify and monitor levels of NBC hazard; however, chemically sensitive papers will only detect and identify liquid chemical agents.

b. On-board NBC detection is unlikely to provide aircrew or passengers sufficient

warning time to mask up when in flight to protect them against the effects of the threat substance. This is especially the case with nerve agents where equipment would be required detect minute quantities to prevent the aircrew from suffering from miosis.

1810. **Contamination Avoidance Procedures/Guidance:**

a. Commander should have access to NBC Warning and Reporting information to inform them of hazard areas. NBC reconnaissance and survey will deny or confirm hazard areas. Know these areas and avoid them.

b. If aircraft must land in contaminated areas, pick landing zones, which will have a reduced transfer effect:

(1) If liquid chemical contamination is known then a dusty landing zone is best if you have a choice of landing site.

(2) If nuclear contamination is present the opposite applies (non-dusty landing site).

c. Contaminated crews should conduct inspections without touching or shaking items (when possible). Many points can be inspected visually.

d. Increase the use of chemical resistant covers when not flying. Use engine covers, flyaway gear, and hatches. If possible, provide overhead cover for parked aircraft.

e. Apply adhesive detection paper to the landing gear of the aircraft. Groundcrew should monitor the helicopter for contamination before servicing and after sorties, in accordance with unit Sops. In addition, any servicing or turn-round of known contaminated helicopters must be accompanied by NBC monitoring. Another piece of adhesive detection paper can be placed on the windscreen where the aircrew can see it.

f. During terrain flight, areas of heavy vegetation should be avoided because vapour is dispersed less quickly where the wind is blocked. Open areas or high ground afford the best opportunity to evade this hazard.

g. Artillery impact areas should also be avoided as the enemy may have employed NBC munitions.

1811. **Contamination Control Procedures/Guidance.** The following can limit the spread of contamination:

a. Ground crews could conduct operations without requiring the aircrew to exit the aircraft.

b. Limit the number of aircraft that must operate in a contaminated area or use aircraft already contaminated.

c. When carrying contaminated personnel or casualties, lining the troop compartment with chemically resistant material is a field expedient way to limit the spread of contamination. A chemically resistant material can be fastened between the troop compartment and the flight compartment with tape or Velcro to limit contamination transfer. The aircraft's heater can be used in conjunction with the material to create an over pressure in the pilot's compartment but is not a substitute for aircrew NBC ensembles. This will limit vapours from entering the compartment.

1812. **Levels of Decontamination.** Once a helicopter is contaminated it is difficult to decontaminate it completely. The tactical situation and the availability of aircraft will determine the degree of decontamination attempted. The goal of all decontamination efforts will be to reduce the hazard to the lowest possible level. During sustained operations, in order to maintain combat power for as long as possible, commanders must employ risk management measures to reduce, as far as practicable, the time personnel spend in NBC protective equipment and thereby reduce the degradation suffered. Commanders should also consider the use of collective protection to provide personnel with rest and relief in a hazard area. Only specialist decontamination units, usually established in the rear area, will be able to conduct thorough decontamination to permit a reduction in protective clothing. The resource owner at each location may perform selective operational decontamination using expedient means. It may be necessary to continue to operate helicopters in a dirty condition before they too can be subjected to decontamination procedures, but, in this event, all who may come into contact with contaminated helicopters must be suitably attired and made aware of the hazards that they face. Routine flight and any ground operations with rotors turning help to decontaminate exterior surfaces of the aircraft; however, this could result in the ground contamination being transferred back onto the aircraft in a self defeating process. The wind and warm temperatures generated by the engines help to dislodge particles and expedite the evaporation of NBC agents. Complete decontamination of surfaces by evaporation however, is not possible because some agents may remain in the paint, fissures and screw threads. Care must be taken not to spread contamination to clean parts of the helicopter. There are three options to be considered:

a. **Immediate Decontamination.** The purpose of immediate decontamination is to save lives and minimise casualties. Initial effort will, therefore, be concentrated on personnel.

b. **Operational Decontamination.** To enable operations to be sustained for longer periods it will be necessary for units to carry out operational decontamination of helicopters in order to reduce the risk to personnel. Unit commanders should select sites dedicated to the decontamination of aircraft

and organise them to take account of aircraft type, mission, terrain and wind conditions. If necessary, operational decontamination may be accomplished in two stages:

(1) **Stage 1**. Selected areas of the aircraft that are likely to be touched by personnel (landing gear, fuel ports, doors, steps, and handholds) are decontaminated to limit the transfer and spread of contamination. Wash exterior surfaces with decontaminants to flush off contamination. Fuel, surfactant, and water are most commonly used. Ensure run-off is contained, appropriately marked with NBC warning signs, and disposed of as contaminated waste. See Figure 17-I.

(2) **Stage 2**. As soon as time and resources permit, all external and accessible internal surfaces may be decontaminated. The primary concern is to wash contaminants from the aircraft exterior and, as a minimum, the internal cabin floor. Insure run-off is contained, appropriately marked with NBC warning signs, and disposed of as contaminated waste. See Figure 18-I.

c. **Thorough Decontamination.** Thorough decontamination of helicopters is best accomplished at sites in the rear area established by specialist chemical units. Thorough decontamination is a lengthy process, the aim of which is to reduce contamination to the lowest possible levels, thus permitting the partial or total removal of individual protection and the continuation of operations with minimum degradation. After deplaning of personnel and removal of role equipment, all parts of the aircraft including engine, transmission and equipment compartments must be checked and cleansed. Some panels and equipment will have to be removed and the aircraft must, therefore, be shut down. See Figure 18-I.

Type of Decontamination	When, Who, and Why	What	Examples of Type Decontamination Agent
Stage 1 (operational)	After immediate decontamination, decontamination by crew to allow continued operations within at most 30 mins to reduce contact hazard (NOTE 2)	Essential operating surfaces on the aircraft	Personal Decontamination Kit, Aircraft fuel (NOTE 1)
Stage 2 (operational)		The entire exterior surface of the aircraft (NOTES 3 and 4)	Hot water and surfactant
Thorough Aircraft Decontamination	Mission allows decontamination units to reduce hazard to negligible risk levels	The entire exterior surface and selected interior surfaces of the aircraft	10 percent sodium carbonate solution 4.5 kilograms (10 pounds) of sodium carbonate to 45.5 litres (12 gallons) of water)

NOTES:

1. Do not use fuel inside the aircraft.
2. Decontamination is most effective if conducted within 10-30 mins of contamination depending on the material to be decontaminated.
3. Perform aircrew spot decontamination to reduce contact hazard inside the aircraft.
4. Do not spray water inside the aircraft.
5. See Figure 17-2 for no direct water pressure contact areas.
6. Due to the intolerance of modern helicopters to liquid, a helicopter technician should be present during all decontamination operations to advise on aircraft sensitivities.

Figure 18-I: Three Types of Aircraft Decontamination

1813. **Decontamination Procedures/Guidance.** Equipment will vary by nation but large quantities of water will invariably be required. The most common decontamination procedure is to wash the aircraft with hot water containing a surfactant followed by a clear water rinse, avoiding spraying water on electrical components. Water pressure should be adjusted to avoid damaging the aircraft. Hot air, if available, should be directed onto sensitive components that cannot be washed. Only approved cleaning compounds should be used to decontaminate aircraft. If pressurised water is used

all blanking plates should be in position and other vulnerable apertures should be sealed.

a. **Standard Decontaminates.** No effective chemical compound is available for full aircraft decontamination. Caustic decontaminants such as DS2, Super Tropical Bleach (STB), or sodium hypochlorite are not considered safe. STB corrodes metal components and aircraft skin, and DS2 corrodes rubber, plastic, and Plexiglas. Spot decontamination, however, may be performed using Fullers Earth or individual skin decontamination kits.

b. **Expedient Decontaminates.** Soap and water, kerosene, aircraft fuel and diesel fuels are approved as decontaminants on selected parts of the helicopter. Fuel is effective in removing some agents from aircraft skin and components; however, it does not neutralise the agents. If water is available, personnel should use it to rinse off the fuel. Many parts of the helicopter are delicate and cannot stand high-pressure water or extreme hot air. Users should refer to Figure 17-II and operators'/maintenance manuals for no direct water-pressure areas.

1814. **Site Requirements.** The decontamination site must be capable of accommodating the appropriate aircraft type in the required numbers:

a. It should be relatively secure but close enough to refuelling and rearming points to permit a reasonably quick turn around if required.

b. The site should have sufficient terrain flight routes within 2 to 3 kilometres to facilitate entry and exit.

c. A slight slope to the terrain is desirable but must remain within aircraft limits.

d. It is preferable to sequence groups of aircraft through the decontamination site to prevent arriving or departing aircraft interfering with decontamination operations.

e. Depending on the personnel and resources available, it may be possible to cleanse several aircraft simultaneously.

1815. **NBC Hardening.** NBC hardening is designed to make any equipment easier to decontaminate, withstand the damaging effects of NBC substances and decontamination agents and be compatible with operators wearing full NBC individual protective equipment. Where commanders identify areas of helicopter NBC hardening deficiency they should bring this to be attention of their appropriate national staffs.

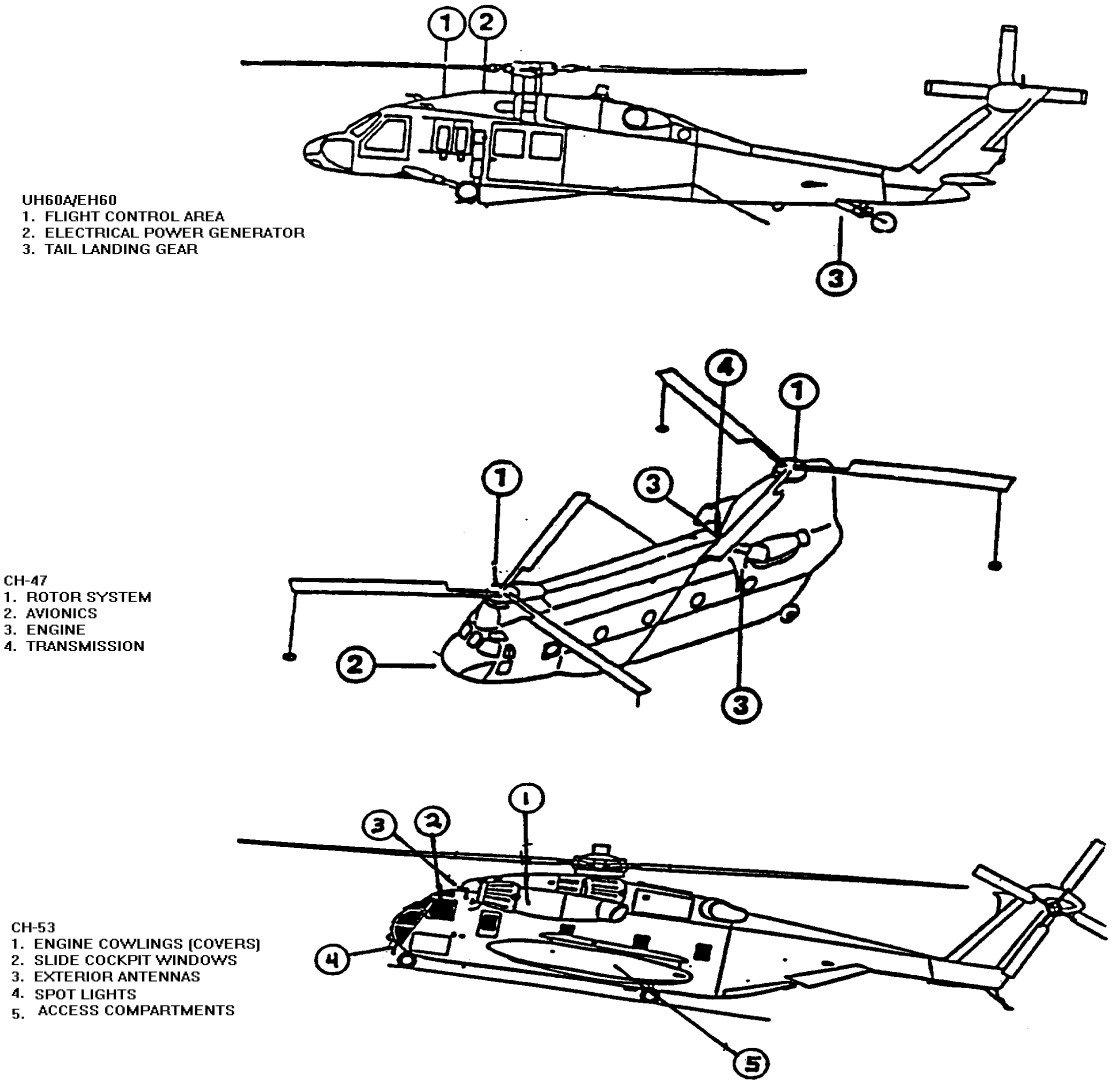

Figure 18-II: No Direct Water Pressure Areas of the Helicopter

ANNEX 18A - MISSION ESSENTIAL PRE-LOAD CHECKLIST

TASK	COMPLETED ACTIONS
1. Monitor payload for contamination.	
2. Load liquid-contaminated cargo if aircraft interior is already contaminated or restricted to operations in a contaminated area.	
3. If mission permits, decontaminate payload: a. Weather in a well ventilated, sunlit area. b. Wash with a appropriate decontaminant or equivalent. Apply undiluted with brooms, brushes, mops or rags. Allow 5-15 minute contact time before rinsing. c. Load cargo whenever mission dictates, but consider maximising ground time for payload decontamination to reduce risk to crew and aircraft.	
4. Re-monitor payload for liquid decontamination.	
5. Decontaminate, seal, cover and/or containerise contaminated payload if mission permits.	
6. Re-monitor payload.	
7. Load payload as mission requires.	

ANNEX 18B - MISSION SUPPORT LOADING CHECKLIST

TASK	COMPLETED ACTIONS
1. Monitor payload for contamination.	
2. If mission permits, decontaminate payload: a. Weather in a well ventilated, sunlit area. b. Wash with a appropriate decontaminant or equivalent. Apply undiluted with brooms, brushes, mops or rags. Allow 5-15 minute contact time before rinsing.	
3. Re-monitor payload for liquid decontamination.	
4. Seal, cover and/or containerise contaminated payload if mission permits.	
5. Re-monitor payload.	
6. Weather/wash and re-pallet contaminated payload if mission permits.	
7. Re-accomplish checklist until contamination is a vapour hazard only: then load payload.	

ANNEX 18C - RECONSTITUTION LOADING CHECKLIST

TASK	COMPLETED ACTIONS
1. Monitor payload for contamination.	
2. Weather and wash contaminated payload until no contamination is detected.	
3. Re-monitor payload.	
4. Move contaminated payload to wind-sheltered area and re-monitor.	
5. If liquid contamination is found, return to step 2.	
6. If vapour contamination is found, allow payload to ‘off-gas’ and return to step 4.	

LIST OF ABBREVIATIONS AND ACRONYMS

AA	Assembly Area
ACA	Airspace Control Authority
ACL	Allowable Cabin/Cargo Load
ACM	Airspace Control Means
ACMREQ	Airspace Control Means Request
ACO	Airspace Control Order
ACP	Air Control Point
ACS	Airspace Control System
AD	Air Defence
AH	Armed/Attack Helicopter
AHC	Attack Helicopter Crew
AI-ROZ	Air Interdiction Restricted Operations Zone
ALO	Air Liaison Officer
AM	Airspace Management
AMC	Air Mission Commander
AMSFOR	Airmobile Security Forces
AO	Area of Operations
AOA	Amphibious Operations Area
AOB	Angle of Bank
AOCC	Air Operations Co-ordination Centre
APOD	Airport of Debarkation
ASE	Aircraft Survivability Equipment
ASO	Air Support Organisation
ATC	Air Traffic Control
ATGM	Anti-tank Guided Missile
ATO	Air Tasking Order
AUW	All-up Weight
AW	Amphibious Warfare
AWACS	Airborne Warning and Control System
BDA	Battle Damage Assessment
BDR	Battle Damage Repair
BDZ	Base Defence Zone
BP	Battle Position
CAS	Close Air Support
CEI	Communications Electronic Instructions
CG/COG	Centre of Gravity
COMINT	Communications Intelligence
CL	Co-ordination Level
COMJAM	Communications Jamming
CP	Command Post
CPT	Corps Planning Team

CRA	Corps Rear Area
CS	Combat Support
CSAR	Combat Search and Rescue
CSCM	Counter Surveillance Control Measures
CSS	Combat Service Support
C2	Command and Control
C3	Command, Control & Communications
C3I	Command, Control, Communications & Intelligence
C4	Command, Control, Communications & Computers
C4I	Command, Control, Communications, Computers & Intelligence
DAC	Dangerous Air Cargo
DF	Direction Finding
DP	Decision Point
DST	Decision Support Template
DTG	Date Time Group
EA	Electronic Attack
EA	Engagement Area
ECM	Electronic Counter-measures
ECCM	Electronic Counter-counter-measures
ELINT	Electronic Intelligence
EMCON	Emission Control
EO	Electro-optical
EP	Electronic Protection
ES	Electronic Support
ESM	Electronic Support Measures
EW	Electronic Warfare
FAA	Forward Assembly Area
FAADS	Forward Area Air Defence System
FAC	Forward Air Controller
FARP	Forward Arming and Refuelling Point
FC	Fire Co-ordinator
FCM	Fire Control Measures
FEBA	Forward Edge of the Battle Area
FLOT	Forward Line of Own Troops
FOB	Forward Operating Base
FRAGO	Fragmentation Order
FSCC	Fire Support Co-ordination Centre
FSE	Fire Support Element
FSO	Fire Support Officer
GPS	Global Positioning System
GS	General Support
HELACK	Acknowledgement to Helicopter Request Message
HELLSREP	Helicopter Landing Site Report
HELQUEST	Helicopter Request Message
HELTASK	Helicopter Tasking Message

HF	High Frequency
HIDACZ	High Density Airspace Control Zone
HPT	High Payoff Targets
HPTL	High Payoff Target List
HUSLE	Helicopter Underslung Load Equipment
IAS	Indicated Air Speed
ICAOC	Interim Combined Air Operations Centre
IEW	Intelligence Electronic Warfare
IFF	Identification Friend or Foe
IFR	Instrument Flight Rules
IMC	Instrument Meteorological Conditions
IMINT	Image Intelligence
INS	Inertial Navigation System
IP	Initial Point
IPB	Intelligence Preparation of the Battlefield
IR	Infra-red
ISB	Initial Staging Base
JAAT	Joint Air Attack Team
JFC	Joint Force Commander
JIPTL	Joint Integrated Prioritised Target List
JSEAD	Joint Suppression of Enemy Air Defences
LD	Line of Departure
LDO	Laser Designator Operator
LIMEX	Limited Extraction
LLTR	Low-Level Transit Route
LO	Liaison Officer
LOC	Lines of Communications
LP	Landing Point
LRSU	Long Range Surveillance Units
LS	Landing Site
LTL	Laser to Target Line
LZ	Landing Zone
MAOT	Mobile Air Operations Team
METT-T	Mission, Enemy, Terrain, Troops and Time available
MLRS	Multiple-launch Rocket System
MOOTW	Military Operations Other Than War
NAI	Named Areas of Interest
NBC	Nuclear, Biological, Chemical
NC	No Change
NEO	Non-combatant Evacuation Operation
NOE	Nap of the Earth
NVD	Night Vision Device
NVG	Night Vision Goggles
OP	Observation Post
OPCOM	Operational Command

OPCON	Operational Control
OpO	Operations Order
PIR	Priority Intelligence Requirement
POC	Point(s) of Contact
POL	Petrol, Oil and Lubricants
PUP	Pick-up Point
PZ	Parachute Zone
QRF	Quick Reaction Force
ROD	Rate of Descent
ROE	Rules of Engagement
ROZ	Restricted Operations Zone
RT	Radio Telecommunications
RV	Rendezvous
SAR	Search and Rescue
SC	Special Corridor
SEAD	Suppression of Enemy Air Defences
SHORAD	Short Range Air Defence
SIC	Subject Indicator Code
SIF	Selective Identification Feature
SIGINT	Signals Intelligence
SOI	Signal Operating Instructions
SOP	Standard Operating Procedure(s)
SPOD	Seaport of Debarkation
SPS	Standard Positioning Service
TACAIR	Tactical Air Support
TACOM	Tactical Command
TACON	Tactical Control
TACP	Tactical Air Control Party
TAI	Target Areas of Interest
TH	Transport Helicopter
TI	Thermal Imager
TIH	Toxic Industrial Hazards
TMRR	Temporary Minimum Risk Route
TTP	Tactics, Techniques and Procedures
UAV	Unmanned Aerial Vehicles
USL	Underslung Load
USLC	Underslung Load Clearance
USLE	Underslung Load Equipment
USMC	United States Marine Corps
VTOL	Vertical Take-off and Landing
WCO	Weapons Control Order
WFZ	Weapons Free Zone

GLOSSARY

ABSEILING

Descent by a rope or tape from a helicopter and controlling such descent by a friction device applied by a descending individual or by a helicopter crew member. (Also known as 'Rappelling').

AIRCRAFT COMMANDER

The aircrew member designated by competent authority as being in command of an aircraft and responsible for its safe operation and accomplishment of the assigned mission. (AAP-6).

AIR ASSAULT

The US Army uses the term air assault to describe airmobile operations. The air assault formation uses its helicopters as fully integrated resources to afford mobility for its ground forces, including their Combat Support (CS) and Combat Service Support (CSS), and to provide firepower. The size of the air assault formation and its complete range of capabilities provides the strength and flexibility to undertake a wide range of missions.

AIR MANOEUVRE

The integrated use of rotary wing assets, with all arms forces and other combat elements, as a manoeuvre element for joint or multinational operations

AIR MECHANIZATION

Air Mechanisation is a process of achieving greater combat capability by increasing the proportion of armed helicopters to transport helicopters. Operations in which armed aviation forces conduct independent combat for a limited period without involvement of a ground manoeuvre element are referred to by some nations as air mechanised operations.

AIRMOBILE OPERATION

An operation in which combat forces and their equipment manoeuvre about the battlefield by aircraft to engage in ground combat. (AAP-6).

AIR MOVEMENT

Air transport of units, personnel, supplies and equipment including airdrops and air landings. (AAP-6).

AIRSPACE CONTROL ORDER

When all airspace requests have been correlated and conflicts resolved, the Air Component Commander will promulgate the Airspace Control Order (ACO). Airspace Control Means (ACMs) and procedures are normally in force for the period of validity of the ACO. (See ATP-40).

ANTI-ARMOUR HELICOPTER

A helicopter armed primarily for use in the destruction of armoured targets. Also called 'antitank helicopter'. (AAP-6).

ARMED HELICOPTER

A helicopter fitted with weapons or weapon systems. (AAP-6).

ASSAULT AIRCRAFT

Powered aircraft, including helicopters, which move assault troops and cargo into an objective area and which provide for their resupply. (AAP-6).

ATTACK HELICOPTER

A helicopter specifically designed to employ various weapons to attack and destroy enemy targets. (AAP-6).

AVIATION

Helicopters and other battlefield aerial vehicles, together with their organic support, employed in land operations.

CENTRE OF GRAVITY LIMITS

The limits within which an aircraft's centre of gravity must lie to ensure safe flight. The centre of gravity of the loaded aircraft must be within these limits at take-off, in the air, and on landing. In some cases, take-off and landing limits may also be specified. (AAP-6).

CHALK COMMANDER

The commander of all troops embarked under one chalk number. (AAP-6).

CHALK NUMBER

The number given to a complete load and to the transporting carrier. (AAP-6). (See also 'Serial'.)

COMPOUND HELICOPTER

A helicopter with an auxiliary propulsion system which provides thrust in excess of that which the rotor alone could produce, thereby permitting increased forward speeds; wings may or may not be provided to reduce the lift required from the rotor system. (Not used in this document.)

CONTROL

See 'Operational Control', 'Tactical Control'.

CREWMAN

A member of the helicopter crew who travels in the cargo/passenger compartment in certain Helicopters. His duties include taking charge of the chalk troops from emplaning to deplaning.

CROSS-SERVICING

That servicing performed by one Service or national element for other Services or national elements and for which the other Services or national elements may be charged. (AAP-6).

DEEP OPERATIONS

Those operations directed against enemy forces and functions which are not in contact at the forward line of own troops (FLOT), line of departure, or friendly perimeter and are between the FLOT or perimeter and the forward boundary of the unit conducting the operation. These operations employ long-range fires, air and ground manoeuvre, and command and control warfare to defeat the enemy by denying him freedom of action; disrupting his preparation for battle and his support structure; and disrupting or destroying the coherence and tempo of his operations.

F-HOUR

F-Hour is the time at which the first helicopter crosses the Forward Line of Own Troops (FLOT) in a cross-FLOT operation.

HELICOPTER

See ‘Anti-armour Helicopter’
‘Armed Helicopter’
‘Assault Aircraft’
‘Attack Helicopter’
‘Observation Helicopter’
‘Reconnaissance Helicopter’
‘Transport Helicopter’
‘Utility Helicopter’

HELICOPTER-BORNE OPERATION

An operation in which helicopters act in support of a formation, unit or organization to accomplish the movement of troops, supplies and/or equipment.

HELICOPTER MUTUAL SUPPORT

Helicopter Mutual Support is that support provided by one helicopters for other helicopters during flight.

HIGH HOVER

Hovering at any height above which descent equipment must be used for deplaning personnel and equipment.

HIGH PAYOFF TARGETS

Targets of significance and value to the enemy, the destruction, damage or neutralization of which can lead to a disproportionate advantage to friendly forces.

HOISTING

See ‘Winching’.

HOOK-UP MAN

The person responsible for attaching the external load and for controlling the take-up of strain of the load sling.

IDENTIFICATION, FRIEND OR FOE (IFF)

A system using electromagnetic transmissions to which equipment carried by friendly forces automatically responds, for example, by emitting pulses, thereby distinguishing themselves from enemy forces. (AAP-6). (See also 'Selective Identification Feature'.)

LADDER

Rope or metal device used for descending from or ascending to helicopters.

LANDING LIGHT SYSTEM

Lighting equipment on the ground to assist approach and landing.

LANDING POINT

A point within a landing site where one helicopter or vertical take-off and landing aircraft can land. (AAP-6).

LANDING SITE

A site within a landing zone containing one or more landing points. (AAP-6).

LANDING ZONE

Any specified zone used for the landing of aircraft. (AAP-6).

LOAD CONTROL GROUP

Personnel who are concerned with organization and control of loading within a pick-up zone/site.

MARSHALLER

A person who directs the ground movement of aircraft by the use of hand and arm or light signals.

MULTI-ROLE HELICOPTER

A multi-role Helicopter is one that is specifically designed to carry out more than one role.

OBSERVATION HELICOPTER

Helicopter used primarily for observation and reconnaissance but which may be used for other roles. (AAP-6).

OPERATIONAL COMMAND

The authority granted to a commander to assign missions or tasks to subordinate commanders, to deploy units, to reassign forces, and to retain or delegate operational and/or tactical control as may be deemed necessary. It does not of itself include responsibility for administration or logistics. May also be used to denote the forces assigned to a commander. (AAP-6).

OPERATIONAL CONTROL

The authority delegated to a commander to direct forces assigned so that the commander may accomplish specific missions or tasks which are usually limited by function, time, or location; to deploy units concerned, and to retain or assign tactical control of those units. It does not include authority to assign separate employment of components of the units concerned. Neither does it, of itself, include administrative or logistic control. (AAP-6).

PAYLOAD

The sum of the weight of passengers and cargo that an aircraft can carry. (AAP-6).

RADIUS OF ACTION

The maximum distance a ship, aircraft, or vehicle can travel away from its base along a given course with normal combat load and return without refuelling, allowing for all safety and operating factors. (AAP-6).

RAPID REFUELLING

A means of refuelling helicopters with engines running and rotor(s) running or stopped.

RAPPELLING

See ‘Abseiling’.

READY POSITION

In helicopter operations, a designated place where a helicopter load of troops and/or equipment waits for pick-up. (AAP-6).

RECONNAISSANCE HELICOPTER

A helicopter designed primarily for reconnaissance operations. Also called 'observation helicopter'.

ROPING

Descending or climbing a rope secured to a strong point on the helicopter.

ROTOR DOWNWASH

The air flowing downwards from helicopter rotors, volume and speed being in proportion to the power being used. When a helicopter is hovering near the ground the force from the rotor downwash can be very high.

SELECTIVE IDENTIFICATION FEATURE (SIF)

Airborne pulse-type transponder that provides automatic selective identification of aircraft in which it is installed, to friend-or-foe identification installations, whether ground, shipboard, or airborne. (AAP-6). (See also 'Identification Friend or Foe').

SERIAL

An element or a group of elements within a series which is given a numerical or alphabetical designation for convenience in planning, scheduling and control (AAP-6). (See also 'Chalk Number').

TACTICAL CONTROL

The detailed and, usually, local direction and control of movements or manoeuvres necessary to accomplish missions or tasks assigned. (AAP-6).

TACTICAL REFUELLING

Refuelling during operations normally conducted away from a fixed facility.

TERRAIN FLIGHT

Flight close to the earth's surface during which airspeed, height and/or altitude are adapted to the contours and cover of the ground in order to avoid enemy detection and fire. (AAP-6). This includes - low flying, contour flying and Nap of the Earth (NOE) flying.

TRANSPORT HELICOPTER

A utility helicopter used primarily for the carriage of troops and/or equipment. (Also called 'cargo helicopter'). (See also 'Utility Helicopter'.) Transport Helicopters are designated according to their maximum all up mass, as follows:

Light	6-7.99 tonnes.
Medium	8-10.99 tonnes.
Heavy	11 tonnes and over (AC 225 (Panel X)).

UTILITY HELICOPTER

A multi-purpose helicopter capable of lifting troops but may be used in command and control, logistics, casualty evacuation or armed helicopter role. (AAP-6).

WEAPONS CONTROL STATUS (WCS)

Weapons control of AD weapons systems is expressed as a status declared for a particular area and time. They define the degree of freedom to be afforded to AD weapon systems and may be caveated helicopter or fixed wing as appropriate. AD weapons systems that are able to engage targets in volumes of airspace allocated to friendly air activity automatically adopt a specified restrictive WCS in the appropriate engagement arcs regardless of the fact that a more permissive WCS might apply to them. (See ATP-40(A)).

WINCHING

Lowering or raising troops or cargo by means of a winch or hoist under the control of a helicopter crew member. (Also known as 'Hoisting'.)

LIST OF EFFECTIVE PAGES - VOLUME 2

Effective Pages	Page Numbers
Original	i to xii
Change 1	xiii to xiv
Original	1-1 to 1-18
Original	2-1 to 2-3 (rb)
Original	2A-1 to 2A-20
Original	3-1 (rb)
Original	3A-1 to 3A-3 (rb)
Original	4-1 to 4-6
Original	4A-1 to 4A-6
Change 1	4B-1 to 4B-2
Original	4B-3 to 4B-6
Original	4C-1 to 4C-2
Original	4D-1 to 4D-6
Original	4D1-1 to 4D1-2
Original	5-1 to 5-2
Original	6-1 to 6-8
Change 1	6-9 to 6-10
Original	6-11(rb)
Original	6A-1 to 6A-2
Original	6B-1 (rb)
Original	6C-1 to 6C-2
Original	7-1 (rb)
Original	7A-1 to 7A-2
Original	7B-1 to 7B-2
Original	7C-1 (rb)
Original	7D-1 (rb)

Effective Pages	Page Numbers
Original	7E-1 to 7E-2
Change 1	8-1 to 8-4
Change 1	8A-1 to 8A-2
Original	9-1 to 9-8
Original	10-1 to 10-8
Change 1	10-9 to 10-10
Change 1	10A-1 to 10A-5 (rb)
Change 1	10B-1 to 10B-4
Original	11-1 to 11-9 (rb)
Change 1	12-1 to 12-4
Original	12-5 to 12-8
Change 1	12-9 (rb)
Change 1	12A-1 to 12A-2
Original	13-1 to 13-3 (rb)
Original	14-1 to 14-4
Original	15-1 to 15-4
Original	15A-1 to 15A-12
Original	16-1 to 16-3 (rb)
Original	17-1 to 17-3 (rb)
Original	17A-1 to 17A-3 (rb)
Original	18-1 to 18-10
Original	18A-1 (rb)
Original	18B-1 (rb)
Original	18C-1 (rb)
Original	Abbn-1 to Abbn-4
Change 1	Glossary-1 to Glossary-8
Change 1	LEP-1 to LEP-2

(rb) = reverse blank