AUSTRALIAN DEFENCE FORCE

PUBLICATION

OPERATIONS SERIES

ADFP 39

AIRBORNE OPERATIONS

CHAPTER 1

INTRODUCTION

101. An airborne operation is defined as:

`An operation involving the movement of combat forces and their logistic support into an objective area by air for execution of a tactical or strategic mission, when the forces involved may be required to engage in combat immediately on leaving the aircraft.´

102. An airborne force is defined as:

`A force composed primarily of ground and air units organised, equipped and trained for airborne operations.´

103. An airborne operation may be a combined or joint operation involving aircraft and ground forces. The significant feature of an airborne operation is that the ground force may be required to engage in combat immediately on leaving the aircraft or, in the case of paratroop operations, once paratroops have arrived at the drop zone (DZ). The force may be delivered by airlanding, rappelling or parachute from either fixed wing or rotary wing aircraft.

104. Independent airborne operations are conducted from outside the proposed area of operations (AO) at long range independent of other ground forces. They will normally be commanded directly from the operational (CJFA/LJC) level and may be used to:

a. secure a point of entry,

b. deploy forces rapidly to establish or secure a remote AO,

c. deploy forces for reconnaissance or intelligence-gathering,

d. conduct raids,

e. undertake or assist a services protected or services assisted evacuation of Australian citizens or foreign nationals from another country, or

f. deploy special forces on national tasks.

105. Tactical airborne operations are conducted within an existing AO, possibly with support from or acting in concert with other ground forces. They may be used to:

a. seize and hold key terrain;

b. attack the enemy´s command, control and communications systems;

c. divert or block enemy reserves;

d. protect flanks;

e. capture landing areas for subsequent operations;

f. delay or cut off an enemy´s retreat;

g. reinforce, relieve or extract ground troops; or

h. assist with the evacuation of Australian citizens or foreign nationals.

CHAPTER 2

FUNDAMENTAL CONSIDERATIONS FOR AIRBORNE OPERATIONS

CHARACTERISTICS

201. The mobility of forces using fixed or rotary wing aircraft enables them to move rapidly from a remote location to the vicinity of an objective. This enables a commander to operate within the enemy commander´s decision-making cycle and assists in applying critical force against the enemy´s centre of gravity.

202. The most important characteristic of airborne operations is surprise. These operations can be conducted with speed over long distances thus enhancing operational flexibility. To ensure surprise, security before and during an airborne operation is vital.

LIMITATIONS

Resource Limitations

203. Air transport resources available for large scale operations will seldom meet all demands. Planning of air transport support is based upon using the minimum number of aircraft to achieve the task in the required time. Balanced against this may be the need to maximise forces on the ground in the minimum possible time.

Planning

204. Joint aspects of planning for an airborne operation should be considered from initiation through all intermediate stages to the conclusion required by the initiating authority. The complexity of airborne operations necessitates thorough planning by and between all headquarters involved[(1)]. Details are contained in chapter 4.

Time to Mount

205. Time required to mount an airborne operation will be affected by:

a. grouping of transport aircraft,

b. planning requirements,

c. detailed intelligence needs,

d. deployment of the airborne force to the mounting area,

e. arrangements for base administration,

f. rigging of heavy equipment,

g. planning and assembly of equipment for resupply, and

h. link-up of follow-on forces.

CHAPTER 3

COMMAND AND CONTROL

301. The general principles of command and control of joint operations are given in ADFP 1 - *Doctrine.* The success of an airborne operation will depend upon a command structure which provides centralised direction but allows for decentralised execution thus permitting concurrent activity.

Initiation

302. Airborne operations may be initiated by a commander at the operational or tactical level who has operational authority over appropriate air and ground elements. A formal initiating directive will normally be issued by that officer to the force commander and is the authority under which the operation is conducted. The contents of directives, as detailed in ADFP 9 - *Joint Planning,* are established through preliminary planning at the headquarters proposing airborne operations and should cover the following points:

a. Establishment of the airborne force, its mission and the assignment of forces, including any support from external agencies.

b. The force commander should be designated.

c. Command and control arrangements and a clear and unambiguous statement of degrees of operational authority should be included. In combined operations precedence and the responsibility of each ally must be defined.

d. Any constraints, including rules of engagement, must be included (additional constraints are at paragraph 5 to Annex A).

e. Target dates or `window´ for execution of the operation and alternative dates must be stated.

f. Coordination details, including coordination with other forces, deception plans, area of operations, boundaries and mounting arrangements are required.

g. Instructions for termination of the operation, succession of command and force disposition on termination must be clear and unequivocal, particularly in relation to air elements that may be required to support subsequent operations.

h. Subsequent operations, including requirements for link-up may be included.

An example format of an airborne directive is given at Annex A. Such a formal written directive is more applicable to strategic or larger paratroop/airlanded operations.

Airborne Force Commander/Airmobile Force Commander

303. Airborne operations require the concentrated efforts of land, air and, in some instances, maritime forces to accomplish a specific mission. Although the ground force will ultimately close with and engage the enemy, air and maritime forces may also be required to provide operational and logistic support. Unity of command is essential.

304. The force commander commands the operation from initiation to termination and must be involved in the planning at all stages. Ideally, he should be the next superior commander to the commander of the major element involved. A force commander can be from any Service, but must

CHAPTER 4

PLANNING

INTRODUCTION

401. Airborne operations are complicated by the need to coordinate the actions of a force that is functionally disparate and whose mission and tasks are complex. Joint planning principles, factors and phases are covered in ADFP 1 - *Doctrine.* ADFP 9 - *Joint Planning* establishes the procedures for joint planning while air transport planning is addressed in ADFP 14 - *Air Transport.*

402. Time available for planning and preparing for an airborne operation is related to the tempo of operations and is influenced by the readiness of forces involved. Time should be allowed for:

a. assessment of enemy capabilities and likely reactions;

b. gathering intelligence;

c. examining force structure, capabilities and limitations;

d. establishing the best execution `window´;

e. administrative and logistic planning;

f. planning of supporting and preliminary operations;

g. deception plans;

h. preparation and loading of equipment;

i. mounting/transit requirements;

j. briefings and rehearsals;

k. subsequent force maintenance, casualty evacuation and reinforcement plans; and

l. security.

403. The delaying effect of these factors can be reduced by effective planning and training. Under ideal conditions it should be possible to mount a battalion group operation in 24 to 48 hours.

404. Maintenance of security and surprise will be key factors in planning and conducting airborne operations. All aspects of operational security should be addressed, including those in ADFP 41 - *Defence Public Information Policy During Periods of Tension and Conflict.*

Reverse Planning Technique

405. As the ground tactical phase is the decisive phase of an airborne operation, the reverse planning technique is used. The planning sequence is:

a. The ground tactical plan forms the basis for all operational planning and details action which the ground force has to fulfil to achieve the mission. Subsequent operations, such as link-up operations, may influence other planning.

CHAPTER 5

MOUNTING PHASE

501. The mounting phase of an airborne operation, which includes both staging and loading, commences when the airborne force concentrates in its assembly areas and concludes when the force is loaded onto aircraft in preparation for the air transport stage. The airborne force should be responsive to requirements of the force commander throughout this phase. Accordingly, all elements should at least be under operational control from the nominated assembly time.

502. The mounting phase involves:

a. preparations in assembly areas,

b. staging of the airborne force through a forward base, and

c. actions at mounting airfields.

Assembly Areas

503. Ground elements normally assemble at an Army installation. Collocation with air transport elements is not essential in the early stages of this phase.

504. Actions in assembly areas include:

a. issue of orders;

b. grouping changes;

c. additional maintenance effort to ensure maximum aircraft serviceability;

d. serviceability checks for vehicles, stores and equipment and their preparation for air transport or rigging for airdrop; and

e. rehearsals of aircraft loading, emergency procedures and landing area rallying.

Marshalling

505. Carefully developed marshalling procedures are essential for the rapid and orderly mounting of an airborne operation under conditions of maximum security. Selection of transit camps, mounting airfields and pick-up zones is based upon the air transport plan. To avoid a concentration of forces in one area, transit camps may be located some distance from mounting airfields.

506. Marshalling should be accomplished in the minimum possible time. For some operations marshalling may be a complex activity involving a number of widely dispersed units. For tactical operations combat forces are likely to be single units or sub-units withdrawn from other duties shortly before mounting the operation and so time available for marshalling may be limited.

Mounting Procedures

507. Depending upon the tactical situation, one of the following mounting procedures may be used:

a. Personnel and equipment are moved to mounting airfields where air transport aircraft are located.

CHAPTER 6

AIR TRANSPORT PHASE

601. The air transport phase begins when the airborne force departs from the mounting airfield and ends when the initial point is reached on approach to the landing/air assault. Decisions on the landing/air assault phase may impact upon conduct of the air transport phase. Similarly, operational limitations in the air transport phase may impose some restrictions on the nature of the landing/air assault phase.

602. Although addressed separately, both phases should be planned concurrently with development of the ground tactical plan. Liaison between ground and air elements is essential and should be established as early as practicable in the initiation and concept development phase of joint planning to ensure an integrated concept of operations.

AIR TRANSPORT PLAN

603. Planning for the air transport phase should address:

a. command and control of the force during air transport, including criteria and responsibility for terminating the operation;

b. operation of the air transport force over routes to be flown;

c. pathfinder activity;

d. communications, including communications security, electronic warfare and emission control requirements; and

e. search and rescue.

Command and Control

604. The force commander, acting on the advice of the air element commander (AEC) and the ground commander (GC), will execute the air transport phase. AEC is responsible to the force commander for the air transport phase including air defence planning. Where an enemy offensive air threat is identified, effective planning is likely to require the assistance of wing or group air intelligence staff.

605. Command and control arrangements for an airborne operation can be tailored to suit individual missions. Where duties of the AEC involve complex coordination tasks which may include communications between the force commander, GC, transport aircraft, escort aircraft and artillery commander, the AEC may have to operate from a dedicated command facility. AEC should always consider the appointment of a suitable officer to lead the transport force from a component unit of the air transport force. Such delegation, which enables the AEC to concentrate on the coordination aspects of a complex operation, must be cleared with the force commander.

606. In most airborne operations the force commander, AEC and GC become separated from each other or their respective forces and rely on communications to exercise command. Each commander should be thoroughly briefed on his prerogatives and the circumstances in which he can exercise those prerogatives.

CHAPTER 7

LANDING OR AIR ASSAULT PHASE

701. The landing or air assault phase of an airborne operation begins when the air transport force departs from the initial point for the final approach to the landing area and ends when the ground commander (GC) has completed his rallying and is capable of manoeuvring his force for combat. The philosophy of the reverse planning process, as applied to airborne operations, dictates that the GC's tactical plan determines the nature of the landing or air assault. Limitations of the air transport force must be taken into consideration when the ground tactical plan is devised.

CONDUCT

Procedures for Approach to Landing Areas

702. Some factors that have an immediate effect on the procedures selected for the landing/air assault phase of an airborne operation are:

a. ground force mission;

b. assets available to the air element commander (AEC) and the degree of operational authority under which they are allocated;

c. speed of assembly required of ground forces;

d. size of ground forces;

e. composition of ground forces;

f. dimensions and marking of landing areas;

g. whether the landing or air assault is to be clandestine or overt;

h. in the case of airmobile operations whether the insertion will be unopposed and therefore a `landing´, or whether it will be opposed and therefore an `air assault';

i. whether the landing or air assault will have the support of other ground, air or naval forces;

j. weather at mounting/transit airfields, en route to and at landing areas;

k. available intelligence and its reliability;

l. time available for battle procedure; and

m. aircrew duty limitations.

Navigation Assistance

703. Limitations to tactical navigation and communications aids presently fitted to the RAAF tactical transport force preclude other than operations in visual conditions throughout the landing/air assault phase when operating in formation. However, the conduct of airborne operations can be enhanced by the use of specialised equipment. The availability of aids such as station-keeping equipment, adverse weather aerial delivery systems, ground radar aerial delivery systems and radar beacons permit the conduct of operations of large formations in other than visual conditions over an objective area.

CHAPTER 8

OFFENSIVE SUPPORT

Planning Offensive Support

801. The planning of offensive support addresses all phases of the airborne operation. Accurate details of enemy fire support assets are critical and planners may have to task specialist reconnaissance units for air or ground missions to obtain detail on enemy ground-based weapons systems, fire control radars and interceptor aircraft. Where possible, planning at this level should include specialist advisers on strike, fighter, artillery, naval gunfire, electronic warfare and other fire support resources.

802. Planning for an independent airborne mission may also include the requirement for interdiction or battlefield air interdiction tasks. These may be conducted as a preliminary operation and if so should be controlled and coordinated by the initiating headquarters. This will leave the force commander and plans staff free to conduct detailed planning.

Allocation of Offensive Support Assets

803. Airborne forces are generally characterised by limited combat power once landed. They are therefore more reliant on offensive support than conventional forces. An opposed airborne operation conducted without artillery or mortar support, or relying entirely on offensive air support, would have little chance of success. It is imperative that force commanders receive timely advice on offensive support requirements early in the joint planning process. Principles pertinent to the allocation of offensive support assets are:

a. concentration of fire,

b. redundancy of assets,

c. responsiveness to impromptu fire support requirements, and

d. decentralised control of assets.

804. There will be a need to coordinate the use of airspace of the airborne force within the area of operations. Further detail may be found in ADFP 13 - *Air Defence and Airspace Control.*

Command and Control

805. Command and control arrangements for fire support must be simple, as they may change for each phase. The grouping and allocation of offensive support assets will be determined by the relative priority given to the airborne operation. The force commander's artillery commander will undertake detailed planning for fire support with advice, as required, on naval gunfire support or close air support from the specialist liaison officers allocated to the force.

806. Artillery units should be allotted to the force commander under varying degrees of operational authority. Responsibility for command is usually retained by the appropriate artillery headquarters.

807. Close air support missions should be conducted as a prelude to artillery or mortar tasks to avoid pauses in effective neutralisation and should be allocated a time on target window as opposed to a specific time. Close air support missions generally cannot provide continuous neutralisation. Post H-hr or P-hr close air support sorties should be placed at a specified alert state, or be on-call to support the operation. Where precision air support techniques are available, the relative endurance, accuracy and imagery of the system can provide increased protection and immediate response from close air support resources.

CHAPTER 9

COMMUNICATIONS

901. Communications should be kept to a minimum, especially in the air transport and mounting phase, to ensure that operational security and the need for surprise are not compromised. Communications for strategic airborne operations are provided by Army and RAAF tactical communications systems for ground force operations, offensive support and command and control of the airborne force. RAN provides communications for activities associated with the operation of Army and RAAF aircraft from RAN ships. A higher command link with the initiating headquarters and HQADF is provided by RAAF for an emplaned airborne force commander (AFC) and by Army for a land-based AFC. Communications for the higher command link between the ground commander (GC) and the initiating authority should be considered once the airborne operation is complete.

902. Communications for tactical airborne operations can be provided in similar fashion. Conversely, the type of tactical airborne operation and deployment distance may predicate provision solely by single Service tactical communications or communications integral to the airborne force.

Planning Considerations

903. Factors that should be considered in designing the communications plan for an airborne operation include:

a. command and control arrangements,

b. security,

c. reliability,

d. flexibility,

e. simplicity,

f. integration, and

g. economy.

904. Location of the principal command appointments and succession of command arrangements affect the communications plan. For example, the artillery commander commanding the fire support coordination centre may require dedicated command facilities to effect airspace control as well as communications for coordination of offensive support. In addition, subordinates identified to assume command should have the communications facilities necessary to undertake those responsibilities. The nomination of an alternative headquarters or command aircraft with the appropriate communications should be considered.

905. Operational security is paramount in airborne operations and easily compromised by communications. Emission control policy and plans should consider enemy electronic warfare capabilities and restrict emissions especially during the air transport phase. Communications for airborne operations should be secure where possible and use emitters with a low probability of interception.

906. Reliability is achieved by using alternative routes, equipment redundancy, spare capacity and reserve equipment. Airborne retransmission and relay facilities should be considered in the communications plan, particularly where stations are separated widely.

CHAPTER 10

NUCLEAR, BIOLOGICAL AND CHEMICAL DEFENCE PLANNING CONSIDERATIONS

1001. The use of a persistent chemical agent on a likely landing area provides the enemy with an efficient means of hindering operations. This threat may not be sufficient for cancellation of the operation. By carefully considering the effects of a nuclear, biological or chemical (NBC) environment on operations, planning staff can minimise any disruption caused by the use of an NBC weapon provided extensive training and sufficient allocation of NBC equipment have occurred.

Planning Phase

1002. The wearing of NBC ensemble by troops will tend to increase all planned times for ground operations. The extent of the increase is dependent upon the equipment worn, degree of physical exertion required, intricacy of the task to be performed and the need for contamination control.

1003. Weather and time of day play an important part in considering the effect of an NBC threat upon the selection of H-hr/P-hr. Dawn and dusk favour use of chemical and biological weapons by increasing their persistency. The effect of flash from a nuclear weapon explosion causes most damage to the eyes at night when the pupils are dilated.

1004. Where an NBC threat exists, extra personnel may be required to offset the drop in the level of performance by troops operating in NBC ensemble and to provide:

a. an NBC cell,

b. NBC survey and monitoring,

c. NBC sentries,

d. troops for decontamination tasks, or

e. increased health support.

In the absence of additional manpower, existing airborne force personnel should be trained in secondary roles pertaining to operations in an NBC environment.

1005. Pathfinder teams should be trained and equipped to undertake NBC survey and monitoring. The extent of radiological and chemical contamination will be important in landing area selection. Contamination information will also be important in the selection of threat oriented protection posture (TOPP) level for the airborne operation.

1006. Planners should specify the TOPP level for each phase of the operation. This will be based on the vulnerability analysis conducted by the NBC cell which examines:

a. enemy capabilities,

b. degree of risk accepted by the commander,

c. weather conditions, and

d. nature of the task.

Unit performance is reduced by approximately 40 per cent when wearing TOPP 3, which includes maximum protective clothing.

CHAPTER 11

ADMINISTRATION AND LOGISTICS

1101. The distance from the mounting area to the objective area and, if required, the availability of staging areas, will affect the reaction time for administrative maintenance demands, the casualty evacuation system and the rearward movement of prisoners of war and refugees. These factors, and air maintenance requirements, will directly affect administrative and logistics plans.

1102. Conditions at landing areas should be taken into account. Significant considerations are:

a. expected duration of the operation;

b. size and disparity of the force;

c. facilities, ammunition, water supply, equipment, petrol, oil and lubricants;

d. lines of communication; and

e. health support (see chapter 16).

1103. The force commander will determine the logistics concept to support the operation in the concept of operations. Some direction in respect to this consideration may be given in the initiating directive (see chapter 3). In developing the logistics concept, logistics staff should be aware of the concept of operations and conduct their planning in parallel with operations staff.

1104. Airborne operations are characterised by a number of peculiar planning considerations which will influence administrative and logistics arrangements. The planning sequence for airborne operations is discussed in chapter 4. The ground commander (GC) establishes the priority and sequence of movement for ground forces, equipment and supplies, based on the ground tactical plan. Administrative planning conducted by the GC is done within directions or limitations contained in the initiating directive.

Planning

1105. The reverse planning technique is used when planning administrative support. Major elements to be considered are the:

a. ground tactical plan,

b. landing or air assault plan,

c. air transport plan,

d. loading plan, and

e. staging plan.

1106. A subsequent operational plan should also cover support and maintenance of the airborne force until its elements revert to normal or other command arrangements.

1107. Considerations required for planning administrative support include:

a. administrative and logistics limitations in the initiating directive;

b. mission and tasks of the airborne force;

CHAPTER 12

SELECTION AND MARKING OF DROP ZONES

General

1201. The selection, marking and minimum dimensions of drop zones (DZ) are of the utmost importance in airborne operations. This chapter expands on the information already given in chapter 4. Comprehensive details are at Annex A.

Selection of Drop Zones

1202. Planning must include consideration of both primary and alternative DZ. Should the primary DZ be compromised for whatever reason, the alternatives should be available to enable the operation to proceed.

1203. Circumstances may dictate insertion directly on to one of the ground force objectives and in almost all cases the DZ will be one of the initial objectives to be seized. Due to the limited combat power and vulnerability of airborne forces, only in exceptional circumstances would an airborne force commander consider an airborne assault rather than an insertion.

1204. The air element commander (AEC) is responsible for air aspects of DZ. Where possible, DZ reconnaissance parties should include a transport pilot or similarly qualified representative of the AEC to assess the air aspects first-hand during the reconnaissance.

1205. The force commander is the approving authority for the selection of all operational DZ. His clearance will be based on the advice of both the ground commander (GC) and AEC. When agreement cannot be reached on certain matters, the force commander is the ultimate authority. He may approve the use of a DZ that does not conform to approved limitations depending on the training of the aircrew and ground force involved, the importance of the operation and availability of alternative DZ.

1206. Details on special forces parachute operations are at Annex B.

Annexes: A. Selection and Marking of Drop Zones

B. Special Forces Parachute Operations

CHAPTER 13

SELECTION AND MARKING OF LANDING ZONES AND ADVANCED LANDING GROUNDS

1301. An aircraft's payload and performance will vary according to:

a. prevailing weather conditions,

b. airfield altitude and runway length,

c. basic weight of individual aircraft, and

d. fuel required.

1302. Dimensions and marking of helicopter tactical landing sites are set out in Annex A. Landing zone (LZ) requirements for Hercules C130 and Caribou DHC4 are contained in Annexes B and C.

1303. Planning of an airborne operation must include the operational requirement for both primary and alternative LZ or advanced landing grounds (ALG). Should the primary landing area be compromised for whatever reason, the alternatives should be available to enable the operation to proceed.

1304. Due to the limited combat power and vulnerability of airborne forces, only in exceptional circumstances would a force commander consider an airborne assault rather than an insertion. However, circumstances may dictate that an assault be undertaken directly onto one of the ground force objectives and in almost all cases the landing area will be one of the initial objectives to be seized.

1305. The ground commander (GC), in consultation with the air element commander (AEC), is responsible for the reconnaissance, selection and clearance of landing areas. This process may be carried out in conjunction with the AEC, light observation helicopter pathfinder or pathfinder teams if they are allocated to either commander. The location of landing areas in relation to the GC's tactical plan (and the ground objectives) is agreed between the AEC and the GC.

1306. The AEC is responsible for air aspects of landing areas. Where possible, reconnaissance parties should include a transport pilot or similarly qualified representative of the AEC to assess the air aspects first-hand. Conversely, the AEC may wish to delegate certain responsibilities in respect to the air aspects when it is known that the topography of the area under consideration contains no hazards to aviation.

1307. Methods of marking and authenticating ALG are contained within unit standing operating procedures. The marking system for an ALG is dependent upon the level of training of the crew and the threat. Marking systems may vary from improvised lights along each side of the ALG to no lights being shown.

1308. The force commander is the approving authority for the selection of all operational landing areas. Clearance will be based on the joint advice of both subordinate commanders, the GC and AEC. When agreement cannot be reached on certain matters, the force commander is the ultimate authority. He may approve the use of a landing area that does not conform to the approved limitations depending on the training standard of the aircrew and ground force involved, the importance of the operation and availability of alternative landing areas.

CHAPTER 14

AIRMOBILE OPERATIONS

1401. Airmobile operations are those in which combat forces and their equipment move about the battlefield in aircraft under the control of a ground commander (GC) to engage in land combat. Such a capability enables rapid concentration of combat power throughout a wide area and makes airmobile operations, in themselves or in conjunction with other land operations, a useful means of:

a. inserting reconnaissance or blocking forces;

b. providing mobility for quick reaction forces;

c. inserting forces to seize objectives, perform flank guard, rear guard, covering force or screening tasks;

d. contributing to counterpenetration or counterattack tasks; or

e. providing assistance to services protected and services assisted evacuation tasks.

This chapter provides an introduction to airmobile operations; further detail may be found in Manual of Land Warfare, part one, volume 2 pamphlet No. 9 - *Airmobile Operations.*

1402. Airmobile operations are characterised by:

a. surprise,

b. tactical mobility,

c. less firepower,

d. limited aircraft availability,

e. detailed planning, and

f. requirement for a high standard of collective training.

Command and Control

1403. ADF assets are allocated to commanders on the basis of the urgency or need of the airborne operation. Allocation is generally only for the duration of a specific task or tasks, following which the forces revert to a higher commander for re-allocation.

1404. An airmobile operation may be initiated at any level by an operational instruction or operation order. Aviation assets for an airmobile task may be allocated from:

a. an airmobile regiment which will provide helicopters for troop lift, aerial fire support, command and control and battlefield support;

b. other aviation units which are equipped with aircraft for reconnaissance, surveillance, pathfinding or battlefield support; or

c. other Services or allied forces.

CHAPTER 15

TRAINING FOR AIRBORNE OPERATIONS

INTRODUCTION

1501. Units with airborne roles and tasks must conduct regular training at all levels to ensure an acceptable standard is maintained. Aircraft and parachutes, in the case of paratroops, are simply means to move the ground force into the objective area. After airborne troops have rallied, their battle drills are the same as those of similar units deployed by conventional means.

Skill Training

1502. An airborne force must react to operational requirements with minimum notice but with maximum effectiveness. Progressive levels of training and validation are required. The critical aspects of joint training are command and control, communications and procedures for the emplaning and deplaning of ground forces. The considerable planning requirements for airborne operations will be best identified and highlighted by joint training and exercises.

1503. The employment of forces without a specified airborne role will require extensive training at all levels. The commensurate increase in time and resources required for training this force must be considered when planning operations. In this chapter it is assumed that personnel are qualified in the basic specialist skills of airborne operations.

PARATROOP OPERATIONS TRAINING

1504. Paratrooping necessitates the maintenance of high levels of training, confidence and morale at all levels. Poor self-discipline and training lead to bad battle procedure, inadequate preparation during the mounting and air transport phases, poor performance in the landing or air assault phase and slow rallying on the landing area. The most likely result is a high casualty rate and an overall loss of confidence and combat power.

Ground Element Training

1505. Training of individual paratroops should include:

a. aircraft familiarisation and drills,

b. safety procedures for aircraft,

c. physical and psychological preparedness,

d. ground training in descent drills,

e. preparation of equipment loads for stores, and

f. first aid.

1506. Training of units and sub-units should include:

a. command and control,

b. operational planning,

c. pathfinding techniques and procedures,

CHAPTER 16

HEALTH SUPPORT

INTRODUCTION

1601. General requirements for planning and provision of health support to Australian Defence Force operations are detailed in ADFP 53 - *Health Support.* The nature of airborne operations will often complicate the processes of timely treatment and evacuation and the principles of proximity and continuity will assume particular importance.

1602. The limited combat power likely to be available to airborne forces, the vulnerability of these forces to enemy action and resource limitations are likely to contribute to an increase in casualties. The immediacy of location and treatment of casualties within the area of operations (AO) is likely to be complicated by the nature of operations. In addition, casualty evacuation from the AO could be delayed until secure airheads or surface links with relieving forces are established.

1603. Greater emphasis should be placed on forward treatment and resuscitation and on medical self-sufficiency within airborne forces. In particular, it will normally be necessary to deploy a capability for surgical and post-operative care as part of the airborne force.

GENERAL CONSIDERATIONS

Responsibilities

1604. Airborne operations are likely to involve health support capabilities of the RAAF and Army, and possibly those of the RAN. RAAF will normally have responsibility for provision of health support to airborne forces at mounting bases, forward mounting and operating bases, advanced landing grounds and recovery airfields. RAAF also has responsibility for providing aeromedical evacuation staging facility support at airfields in the tactical and strategic aeromedical evacuation chains, and for providing aeromedical evacuation teams on aircraft used for tactical and strategic aeromedical evacuation.

1605. Army will normally have responsibility for providing health support to the ground force after arrival in landing areas. This is likely to involve elements of brigade administrative support battalion medical companies, parachute surgical teams and forward surgical teams.

Health Support Planning

1606. The health support plan for an airborne operation must tie into the concept of operations or operational plan. The health support plan should outline arrangements for casualty treatment and casualty evacuation both within and outside the AO.

1607. Subordinate health support plans will normally be prepared by health personnel on the staffs of the ground commander and air element commander. A prerequisite for the development of a health support plan will be the provision of a battle casualty estimate by the operations staff. A check list for the appreciation necessary to compile an effective health support plan is at Annex A.

Mounting Phase

1608. Health support in assembly areas and at mounting airfields will normally be provided by existing facilities, supplemented as necessary to meet the needs of the increased patient dependency. Health support elements integral to the ground force and air elements will not normally be given this responsibility as they will be preparing for subsequent phases.

DISTRIBUTION LIST ADFP 39
(as at 13 FEB 95)

HQADF

OPERATIONS DIVISION

ACOPS (M-B-2)	1
ADFCC (M-B-10)	2
DGJCE (DDCO, M-SB-40)	3
DGJOP (M-B-11)	1
DDC2IN (M-SB-45)	1
DJOPS (M-B-20)	1
DJOPS (SO1 CCOPS, M-B-24)	1
DJP (M-SB-24)	2
JEPS (CCLK H-2-01)	4

DEVELOPMENT DIVISION

DGCIS (B-3-22)	1
DGFD(Air) (ADMIN1, B-1-18)	1
DGFD(Land) (B-3-01)	1
DGFD(Sea) (B-4-05A)	1
DGMSC (F-3-17)	1
DGMSC (DMOB, F-3-33)	1

VCDF COORD AND SUPPORT STAFF

CDF Spt Cell (F-3-01)	1

SURGEON GENERAL ADF

DCHSR (CP4-6-40)	1
AOPHS (CP4-6-14	1

DEPARTMENT OF DEFENCE

ADF LEGAL SERVICES BRANCH

ASLEG/DGDFLS (NCC-B3-13)	1

DIRECTORATE OF PUBLISHING

Defence Centre - Canberra	25

DIO

DIO Library (L-4-13)	2

EMERGENCY MANAGEMENT AUSTRALIA

DGEMA (NBH-6-19)	1
CDO (NBH-6-15)	1

PUBLIC INFORMATION BRANCH

DGPI (B-4-29)	1

INTERNATIONAL POLICY DIVISION

ASSPP (F-1-16)	1
CEOCS (F-2-22)	1

FORCE DEVELOPMENT AND ANALYSIS DIVISION

ASFD (F-2-44)	1

DSTO (Science Policy Division)

Head CSSG (Fernhill Park)	1
Head SAA (Salisbury)	1
SRL (HSIS) (Salisbury)	1
SRL (SRS) (APW-2-3-06A)	1

JOINT ESTABLISHMENTS

ADFA (Military Library)	1
ADFWC	90
JSSC	1
NORCOM	5

DEFENCE CENTRES

Defence Centre - Adelaide	2
Defence Centre - Brisbane	2
Defence Centre - Canberra	2
Defence Centre - Hobart	2
Defence Centre - Melbourne	2
Defence Centre - Perth	2
Defence Centre - Sydney	2

DEFENCE LIBRARIES

Defence Central Library (E-G-4)	1
Defence Central Library (Campbell Park CP2-5-6)	1

ADF PERSONNEL OVERSEAS

Australian Exchange Instructor 1
Canadian Forces Command and Staff College
215 Yonge Blvd TORONTO ONTARIO
CANADA M5M 3H9

STAFF OFFICER (COORDINATION) 1
Australian High Commission
Australia House
The Strand LONDON WC2B 4LA
UNITED KINGDOM

ADS-W 1
AS Naval Attache Washington 1

RAAFWASH 1
Australian Embassy
1601 Massachusetts Avenue NW
WASHINGTON DC USA 20036

Australian Liaision Officer 1
HQ US TRADOC Fort Munroe VA
USA 23651-5000

Military Adviser 1
Australian Mission to the United Nations
885 Second Avenue
NEW YORK NY 10017
USA

RAAFPNG 1
Australian High Commission
PO BOX 9129 HOHOLA PNG

RAAFSUBUT 1
Australian High Commission
6 Jalan Yap Kwan Seng
PO Box 10921
Kuala Lumpur 50730 MALAYSIA

OTHER GOVERNMENT DEPARTMENTS

Australian National University 1
The Research School of Pacific Studies
Strategic and Defence Studies Centre
CANBERRA ACT 0200

Civil Aviation Authority 1
Library
PO Box 367
CANBERRA ACT 2601

OTHER COUNTRIES

CANADA

Director General Force Development 1
National Defence Headquarters (QCJWC)
Colonel By Drive
OTTAWA KIA OK2

Canadian NDHQ 1
(Through CDA STANREP ABCA - Army Office, Russell Offices G-1-30A)

NEW ZEALAND

HQNZDF Ops (attn:DDJ Plans) 5
6th Floor
Defence House
WELLINGTON

UNITED KINGDOM

Doctrine Editor (QCJWC Member) 1
Joint Warfare Staff
Royal Marines POOLE DORSET BH15 4NQ

DCTS MOD (QCJWC Member) 1
Ministry of Defence
WHITEHALL
LONDON SW1A 2HB

COMMANDANT 1
AIR WARFARE CENTRE
RAF CRANWELL
Nr Sleaford Lincs NG34 811B

UNITED STATES OF AMERICA

Director (QJCWC Member) 1
Joint Doctrine and Allied
Interoperability Division
J7 Division
Joint Chiefs of staff
PENTAGON
WASHINGTON DC USA 20301-5000

Commandant (QJCWC Member) 1
Air Ground Operations School
Hurlburt Field
FLORIDA USA 32544-5000

Director PSO ABCA (QJCWC Member) 1
Primary Standardization Office
Park Centre II, Suite 275
4401 Ford Avenue
ALEXANDRIA VA USA 22302-1401

COMMANDER 1
Naval Doctrine Command
8952 First Street Suite 200
NORFOLK VA USA 23511-3790

HQ USCINCPAC (for J5, J54, J55) 3
Camp H.M. Smith
Honolulu
HAWAII USA 96861-5025

NAVY

NAVAL COMMANDS

MHQ	4
SJOP (MHQ)	1

SHIPS AND BASES

ADELAIDE	1
ALBATROSS	6
BRISBANE	1
CAIRNS	1
CANBERRA	1
CDT1 WATERHEN	1
CERBERUS	1
COONAWARRA	1
CRESWELL Library (RAN-CL-ACT)	1
DARWIN	1
HOBART	1
KUTTABUL	1
MELBOURNE	1
NEWCASTLE	1
PENGUIN Library (RANSC)	10
PERTH	1
PLATYPUS Library	1
STIRLING	1
SUCCESS	1
SWAN	1
SYDNEY	1
TOBRUK	1
TORRENS	1
Navy Supply Centre	10

ARMY

ARMY OFFICE

OFFICE CGS	1
DAAPA	1
DALS	1
DCOORD-A	1
DEME-A	1
DGLWP-A (for ABCA Library)	2
DLOG-A (incl DLD/DLC)	2

DMI-A	1
DMOV&T	1
DORD-A	1
Gen Staff Div	1
Mat Div Coord	1
Army Svy Regt	1
ARMY OFFICE UNITS	
HQSF (G-1-18)	1
HQ 1 Cdo Regt	1
1 Cdo Coy	1
2 Cdo Coy	1
HQ 1 GL Gp	1
66 GL Sect	1
67 GL Sect	1
68 GL Sect	1
70 GL Sect	1
MEA	1
SASR	5
LAND COMMAND UNITS	
LHQ	12
HQ 1 Div	5
HQ 2 Div	5
HQ 1 Bde	3
HQ 1 BASB	1
HQ 3 Bde	3
HQ 3 BASB	1
HQ 4 Bde	1
HQ 5 Bde	1
HQ 6 Bde	1
HQ 6 BASB	1
HQ 7 Bde	1
HQ 7 BASB	1
HQ 8 Bde	1
HQ 9 Bde	1
HQ 11 Bde	1
HQ 11 BASB	1
HQ 13 Bde	3
HQLSF	1
HQ 1 LSG	1
1 BASB (Fwd)	1
Land Command Battle School	1
1 Armd Regt	1
1/15 RNSWL	1
2 Cav Regt	1
2/14 LH (QMI)	1
3/9 LH (SAMR)	1
4/19 PWLH	1
12/16 HRL	1
A Sqn, 10 LH	1
B Sqn, 3/4 Cav Regt	1
1 Fd Regt	1
2/10 Mdm Regt	1
4 Fd Regt	1
7 Fd Regt	1
8/12 Mdm Regt	1
11 Fd Regt	1
16 AD Regt	6
23 Fd Regt	1
111 AD Bty (Lt)	1
1 CER	1
2 CER	1
3 CER	1
4 FER	1
7 Engr Spt Regt, LSF Engr	1
21 Const Regt, LC Engr	1
22 Const Regt, LSF Engr	1
1 Sig Regt	2
7 Sig Regt (EW)	2
8 Sig Regt	2
103 Sig Sqn	2
104 Sig Sqn	1
108 Sig Sqn	1
109 Sig Sqn	1
139 Sig Sqn	1
140 Sig Sqn	1
141 Sig Sqn	1
144 Sig Sqn	1
152 Sig Sqn	1
615 Sig Tp	1
Land Force Sig Unit	2
1 RAR	1
1/19 RNSWR	1
2/4 RAR	1
2/17 RNSWR	1
3 RAR	1
4/3 RNSWR	1
5/6 RVR	1
5/7 RAR	1
6 RAR	1
8/7 RVR	1
8/9 RAR	1
9 RQR	1
10/27 RSAR	1
11/28 RWAR	1
12/40 RTR	1
16 RWAR	1
25 RQR	1
31 RQR	1
41 RNSWR	1
42 RQR	1
49 RQR	3
51 FNQR	1
NORFORCE	3
Pilbara Regt	1
1 Avn Regt	4
5 Avn Regt	4
161 Recce Sqn	4
162 Recce Sqn	4
171 Comd and Liaison Sqn	4
173 Gen Spt Sqn	1
1 Div Int Coy	1
2 Div Int Coy	1
7 Int Coy	1

DL-4

HQ 9 Tpt Regt	1
HQ 10 Tml Regt	1
1 Fd Hosp	1
2 Fd Hosp	1
3 Fwd Gen Hosp	1
1 Psych Unit	1
TRAINING COMMAND	
HQ Trg Comd	6
C&SC	40
LWC	57
PTS	1
RMC	2
Army College of TAFE	1
Army Maritime School	11
Army School of Transport	49
RAAOC Centre	2
RAEME Trg Centre	2
School of Armour	3
School of Army Health	25
School of Army Aviation	4
School of Artillery	34
School of Infantry	32
School of Military Engineering	1
School of Military Intelligence	2
School of Military Police	1
School of Military Survey	1
School of Signals	10
1 Trg Gp	1
2 Trg Gp	1
3 Trg Gp	1
4 Trg Gp	1
5 Trg Gp	1
6 Trg Gp	1
7 Trg Gp	1
11 Trg Gp	1
Monash University Regt	1
LOGISTIC COMMAND	
HQ Log Comd	5
Bandiana Log Gp	1
Brisbane Log Gp	1
DNSDC	1
Adelaide Log Bn	1
Broadmeadows Log Bn	1
Perth Log Bn	1
BASC Enoggera 1 Div RANLO	1
Bandiana Log Gp	28
AIR FORCE	
AIR FORCE OFFICE	
DOCAS	2
AFPOL3	1
DAFLS	1
DGPP	1
DOMAT-AF	1
RAAFSUCAN Library	4

BASES

Amberley	
HQSRG	2
301ABW	4
301TSF	4
82WG	3
1SQN	5
2AFDS	1
6SQN	5
23SQN	2
38SQN	5
114MCRU	8
Darwin	
321ABW	1
321TSF	2
CRU	8
13SQN	1
35SQN Det A	1
East Sale	
305ABW	1
305TSF	1
32SQN	1
CFS	1
SATC	1
Edinburgh	
HQMPG	2
92WG	2
04ABW	1
304TSF	1
10SQN	5
11SQN	5
24SQN	1
292SQN	1
ARDU	1
EWSQN ARDU	1
Fairbairn	
307ABW	1
307TSF	1
28SQN	1
34SQN	1
RAAFSC	4
Glenbrook	
AHQ	5
Pearce	
306ABW (306TSF)	1
2FTS	1
25SQN	1
38 SQN Det A	1
Richmond	
HQALG	2
303TSF	1
86WG	2

DL-5

22SQN	1
33SQN	2
36SQN	5
37SQN	5
AMTDU	1
ATTU	6
Tindal	
322ABW	2
322TSF	1
1AFDS	1
75SQN	5
Townsville	
HQOSG	2
HQAFDW	3
323TSF	1
84WG	2
27SQN	1
35SQN	5
SUWAG Library	1
Williamtown	
HQTFG	2
302ABW	1
302TSF	1
41WG	2
81WG	2
2OCU	5
3CRU	17
3SQN	5
26SQN	1
76SQN	2
77SQN	5
Williams	
SUWIL (library)	1
21SQN	1
RAAFCOL	2
ADF School of Languages	1
INDEPENDENT UNITS	
1RSU	1
RAAFPU	23

Inquiries:
SOPUBS
ADFWC
RAAF Base
WILLIAMTOWN NSW 2314
Ph: (049) 28 7357
DNATS 841 7357
Fax: (049) 28 7574

1609. Health support at forward bases will normally be provided by deployable Army or RAAF health support assets other than those integral to the ground force and air elements. Where the forward base is also used to sustain subsequent air operations to support or recover the ground force, the base is likely to be a central link in the aeromedical evacuation chain.

Air Transport Phase

1610. Health support requirements may include:

a. support to pathfinders,

b. medical support to search and rescue activities directed at locating and recovering aircrew of downed aircraft, and

c. provision of treatment and evacuation for casualties incurred during the phase.

1611. Casualties occurring during the air transport phase will normally be evacuated to treatment facilities at the mounting airfield or the forward base. Alternatively, where afloat support is provided, casualties may be evacuated by helicopter or surface craft to designated ships.

Landing or Air Assault Phase

1612. During this phase, the airborne force will be most vulnerable and battle casualties are likely to be highest. Health support elements organic to the airborne force will themselves be in the process of deploying and evacuation links to treatment facilities will take time to establish.

1613. Health support requirements are likely to include:

a. location, extraction and immediate medical care of casualties;

b. surface evacuation and forward aeromedical evacuation within the AO;

c. casualty regulation;

d. resuscitative, stabilising and sustaining medical care, including holding of casualties;

e. initial wound surgery;

f. post-operative care;

g. evacuation of casualties to treatment facilities outside the AO; and

h. ongoing medical support to search and rescue.

1614. The senior health officer will exercise technical control over health support during the landing or air assault phase and will normally be responsible for casualty regulation within the AO. The senior health officer will also establish links with health staffs on appropriate HQ and agencies outside the AO to arrange evacuation from the AO and subsequent treatment. The landing or air assault phase will also involve the establishment of health support capabilities at forward operating bases used to support the airborne force.

1615. The health assets normally deployed in support of an airborne operation have a limited capability to support sustained operations. Such operations may require additional health support including:

a. additional evacuation capabilities,

b. enhanced treatment facilities,

c. dental support, and

d. environmental health services.

SPECIFIC CONSIDERATIONS

Airlanded Operations

1616. While battle casualties could be lighter than in other airborne operations, particularly in the case of unopposed landings, there will still be a requirement to ensure the provision of appropriate health support during all phases. Any battle casualties that occur during the landing or air assault phase are likely to be localised.

1617. Securing of the landing area by the ground force will normally facilitate the early establishment of aeromedical evacuation links. This may reduce the extent of medical self-sufficiency required by the ground force.

Airmobile Operations

1618. Battle casualties may be higher than in airlanded operations and may be dispersed at multiple landing areas throughout the AO. This may complicate the task of casualty collection. Aircraft used to insert the ground force should be employed for forward aeromedical evacuation wherever possible.

1619. Airmobile operations will normally be mounted from a secure forward operating base to landing areas within the radius of action of the aircraft involved. This may reduce the requirement for the ground force to be fully medically self-sufficient.

Paratroop Operations

1620. Casualties are likely to be higher in paratroop operations than in other airborne operations, particularly during an opposed insertion. The evacuation of casualties from the AO is likely to be delayed until a secure airhead can be established or surface links are established with relieving forces. This will normally require the ground force to be medically self-sufficient. All health support personnel in the ground force will have to be trained parachutists. Equipment and vehicles must be dropped by air. Payload constraints may limit space available for health personnel and equipment.

Casualties

1621. The main factors affecting the numbers and types of casualties sustained during paratroop insertions are:

a. enemy opposition,

b. excessive wind speed,

c. nature of the landing area,

d. whether the drop is by day or night,

e. altitude of exit,

f. whether single or double-door exits are used, and

g. training and experience of the force.

1622. Wind speed is the most critical of the environmental factors in causing casualties. Under windless conditions, 0.5 to 1.5 per cent casualties can be expected during the landing. As wind speed increases, so to does the expected casualty rate. Casualties are likely to increase if the landing area is short and narrow, or if the ground is uneven or has obstacles.

1623. Regimental aid posts will locate and collect casualties incurred during the insertion. Additional medical support will normally be provided by parachute surgical teams which deploy as part of the ground force. Each parachute surgical team is medically self-sufficient for periods of up to 72 hours but requires administrative support for its patients and staff. The surgical section is capable of performing up to 70 operations in a 72-hour period. It can hold and treat up to 70 surgical and medical patients pending their evacuation from the AO. While health support elements organic to the ground force are capable of holding and treating casualties for limited periods, the early establishment of surface or air evacuation links outside the AO will be essential to maximise casualty recovery and survival.

Annex: A. Check List for Health Support Appreciation

CHECK LIST FOR HEALTH SUPPORT APPRECIATION

Serial	Heading	Considerations
1.	**Review of the Situation**	Background to operation being planned, current operational and health support situation.
2.	**The Aim**	Reflects and conforms with the aim of the operational appreciation, eg `To provide health support to 3RAR PBG during Operation SWIFT EAGLE´.
3.	**Factors Affecting the Aim.** These are statements or facts, or reasonable assumptions, bearing on the Aim, from which deductions can be drawn. Factors relevant to a specific appreciation will vary according to the circumstances. Factors could include:	
	a. **Enemy** - strength, weapon systems, intention, concept of operations, attitude to Geneva Conventions, health threats posed, interference with evacuation.	**Deductions:** Battle casualty (Bcas) rates, where and when Bcas will occur, types of injuries, precautions or protection required by health service units/elements, levels of support to be provided, requirement for reserve health support capability, medical countermeasures (incl nuclear, biological and chemical), evacuation routes and means, requirement to treat enemy casualties, declaration and marking of health service personnel, facilities and evacuation transport.
	b. **Own Forces** - composition, strength, locations, concept of operations for forces being supported; other friendly forces; health support available from other forces; morale, medical, dental, physical and psychological fitness; vaccination status; degree of acclimatisation, health education status; evacuation resources available; general concept of administrative and logistic support.	**Deductions:** Bcas rates, where and when Bcas will occur, non-battle casualty (NBcas) rates, levels of support to be provided, locations types and tasks of health service units, need to provide health support to non-organic forces, interoperability, evacuation means, evacuation routes, requirement to provide a health support reserve, grouping of health support, command and control, requirement for pre and post deployment health briefing and medical training, deficiencies in health support capabilities available, time required to prepare force, health constraints on operational and administrative plans.

Serial		Heading	Considerations
3 cont	c.	**Environment** - vegetation; topography; elevation; latitude; weather (temperature, humidity, wind); sea states; terrain; infrastructure including roads, buildings, airfields, ports and port facilities, communications systems, water supply, sewerage system, sanitation and waste disposal, civilian health facilities and resources; local population including endemic and epidemic diseases, social, economy, housing, local food and nutrition, obstacles to evacuation, concealment; ease of cross country going.	**Deductions:** NBcas rates, types of NBcas, medical specialties required, medical countermeasures, environmental health and preventive medicine support, health education requirements, need for acclimatisation, modification to clothing, specific requirements for medical and dental stores (eg vaccinations), evacuation means, timeframes and routes, sites of health service facilities, civil health infrastructure to be utilised, requirement for engineer assistance, identification of health arrangements for employment of local civilians, health constraints on operational or administrative plans, arrangements for treating civilian casualties.
	d.	**Political** - imperative to minimise casualties, quality health care to be available, support from civilian medical community.	**Deductions:** Scope of care to be provided, casualty information system, public relations arrangements, availability of Reserve health practitioners, utilisation of certain health facilities in the support area.
	e.	**Medical Logistics** - general concept of administrative/logistic support, locations of support bases and areas, lines of communication, security of logistics areas, availability of pharmaceuticals and other Class 8 supplies from other forces and civil infrastructure, local safe supply of blood and blood products, repair and replacement of medical equipment.	**Deductions:** Locations of health facilities, surface evacuation routes, holdings of Class 8 supplies required, blood banking requirements, repair capability for medical and dental equipment, reserve holdings of medical and dental equipment, arrangement for providing health support in logistic and administrative areas and along lines of communication.
	f.	**Time and Space** - deployment time frame, D-Day, H-hr, P-hr, timings for operational phases, dispersion of forces, speed of advance, ability of health support to maintain contact with supported forces.	**Deductions:** Effectiveness of countermeasures, acclimatisation; requirement for reserve or `step-up´ capability; choice of surface evacuation or AME, evacuation priorities, location of level 3 support, mobility of health support, arrangements for redeployment of health support.

Serial	Heading	Considerations
4.	**Health Support Options**	The option or options for achieving the aim of the appreciation that become apparent from consideration of factors affecting the aim and deductions. Courses may differ in locations of health facilities, levels of support to be provided, type of and priorities for evacuation, availability of reserve capabilities, use of civil infrastructure, holding policy, casualty staging policy, etc. Each option should be examined on its merits. Advantages and disadvantages of each should be considered against the aim and the concept of operations.
5.	**Identification of the Preferred Health Support Option**	The selection of the preferred course is the culmination of the appreciation. It is that option that best meets the aim of the appreciation.
6.	**Health Support Plan**	This is developed from the preferred option.

d. aircraft drills (including tactical loading),

e. double-door exit training and flight drills,

f. downed aircraft procedures,

g. drop zone rallying and clearance procedures,

h. health support procedures, and

i. aerial resupply procedures.

Air Element Training

1507. Training of individual aircrew should include:

a. tactical flying,

b. tactical navigation,

c. night operations,

d. aircraft procedures for emplaning and dispatching paratroopers,

e. airdrop load checking,

f. downed aircraft procedures (including crippled aircraft procedures), and

g. escape and evasion.

1508. Training of crews should include:

a. command and control of the air element,

b. operational planning,

c. formation flying and navigation by day and night,

d. airdrop procedures,

e. downed aircraft procedures (including crippled aircraft procedures),

f. landing area identification and procedures, and

g. escape and evasion.

Joint Training

1509. Joint training for paratroop operations should include:

a. command and control of an airborne force,

b. communications procedures,

c. operational planning,

d. mounting and deploying an airborne force, and

e. rehearsals.

AIRMOBILE AND AIRLANDED OPERATIONS TRAINING

1510. The training requirements for airmobile and airlanded operations are similar. While individual training can be minimal for the ground element, the necessity for considerable collective and joint training remains.

Ground Element Training

1511. Individual training of the ground element should include:

a. aircraft familiarisation and drills for emplaning and deplaning,

b. aircraft safety procedures,

c. preparation of equipment for external loads, and

d. navigation (orientation) while en route to the landing area or objective area.

1512. Collective training of the ground element should include:

a. command and control,

b. operational planning,

c. downed aircraft procedures,

d. landing area or pick-up zone aircraft marshalling,

e. rallying drills,

f. landing area clearance procedures,

g. health support procedures, and

h. aerial resupply procedures.

Air Element Training

1513. Training of individual aircrew should include:

a. tactical flying,

b. tactical navigation,

c. night operations,

d. camouflage and security of aircraft in the field,

e. employment of weapons systems,

f. aircraft maintenance in the field,

g. forward refuelling and rearming techniques,

h. operations with external loads, and

i. escape and evasion.

1514. Training of crews should include:

a. command and control of the air element,

b. operational planning,

c. formation flying,

d. formation navigation,

e. fixed-wing maximum take-off and landing procedures,

f. downed aircraft procedures (including crippled aircraft procedures),

g. landing area and pick-up zone procedures, and

h. escape and evasion.

Joint Training

1515. Airmobile or airlanded force joint training should include:

a. command and control of an airborne force,

b. communications procedures,

c. operational planning,

d. mounting and deploying an airborne force, and

e. rehearsals.

MAJOR EXERCISES

1516. Exercise aims should be achievable by ground and air elements. In peacetime, the necessity for planning well in advance is paramount and firm requirements for exercises should be made at least a year ahead. It is important to ensure that intelligence, communications and logistics aspects of the exercise are fully tested where possible.

1517. Command and control is the most important aspect to be tested in major airborne exercises. Procedures should be carefully worked out beforehand and confirmed in prior training periods so that the difficulties of control procedures do not interfere with a major exercise.

1518. Efficient communications are essential to the success of airborne operations. Regular communications training should include:

a. establishing communications before and after insertion,

b. joint procedures,

c. communications security, and

d. knowledge of radio equipment used in joint operations.

1519. Opportunities for practising air support procedures should be created and given a high priority. Procedures exercised should include use of:

a. counter air operations,

b. close air support, and

c. suppression of enemy air defence.

1520. It is essential that logistic support procedures are practised thoroughly and under realistic conditions. The practice of prepositioning stores and vehicles overlooks the difficult logistic problems that an airborne exercise presents and gives a false impression of the capabilities of an airborne force.

1521. Procedures for planning and providing health support should have a high priority for incorporation and testing on major airborne exercises.

1405. The airmobile regiment will normally be allocated under command of the designated joint force commander. It will normally be allocated in direct support of subordinate formation or unit commanders for a specified period or task. In independent operations, the regiment may be allocated under command. Regrouping for specific tasks can occur as necessary but allocation would not normally occur below battalion level.

1406. Other aviation assets will normally be assigned under command of the air element commander (AEC). They may operate under his direct control or be allocated in direct support of a unit for a specific task. Assets assigned from another Service or allied nation would normally be placed under operational control of the AEC.

Command Responsibilities

1407. Command of the operation from initiation to termination is vested in the air mobile force commander (AMFC), including coordination of air transport, offensive support and the ground battle. The force commander must be involved throughout the planning process and should be assigned the necessary forces under command or, in the case of assets from another Service or allied nation, under operational control.

1408. The GC establishes the tactical objectives and phases necessary to achieve his mission in consultation with the force commander. Command of all aircraft assigned to the airmobile force is vested in the AEC, normally the senior officer of the largest assigned aviation lift element. The AEC selects air routes and designs the air movement plan to meet the requirements of the GC. The AEC is also responsible for airspace management, including coordination of offensive air support, in conjunction with the artillery adviser and fire support coordination centre. When operating with ABCA forces, the term Aviation Mission Commander (AMC) may be used in lieu of AEC (QSTAG 847, edition 1 refers).

1409. The authority to either divert to an alternative landing area or terminate the operation rests with the force commander, but may be delegated to the AEC, GC or commander of the first lift serial. An airmobile operation may be terminated for the following reasons:

a. mission accomplishment,

b. loss of combat power or aircraft,

c. failure of a supporting action,

d. weather,

e. changes in the enemy situation, or

f. cancellation by a higher commander.

Location of Commanders

1410. Command of an airmobile operation may be exercised by the force commander from a command and control aircraft. Alternatively, an air defence threat or other considerations may predicate command from the ground using radio relay or retransmission from aircraft or prepositioned ground stations. Once the landing area is secure the force commander may elect to establish his headquarters in that area.

1411. The GC should be deployed with the first lift of the ground force. The aircraft containing the GC should not be the first one into an insecure landing area. Where possible, a command, control and communications aircraft, containing the force commander, AEC and artillery adviser should be employed throughout the mission.

1412. A succession of command must be established for both air and ground elements. The succession must be considered in aircraft loading plans so as to avoid disruption if a commander, due to injury, communications difficulties or aircraft unserviceability, is unable to meet his responsibilities.

Offensive Support

1413. Airmobile forces may be allocated aerial fire support, close air support or naval gunfire support for an operation in addition to artillery and mortars. In the case of an airmobile assault it may be necessary to establish a fire support base in order to ensure sufficiency and continuity of offensive support within range of the objectives. Offensive support resources will be coordinated by the airmobile force artillery commander.

Communications

1414. The following communications nets may be used in airmobile operations:

a. The force command net is a voice net linking the force commander with subordinate commanders, including the GC's sub-units and landing area controllers, in order to exercise overall command of the airmobile force.

b. The ground force command net is a voice net from the GC to subordinate commanders and is usually established using an existing ground force command net once troops are on the ground.

c. The air element command net is a voice net from the AEC to all assigned aircraft, including aerial fire support, battlefield support and close air support aircraft which is usually established using an existing aviation command net.

d. Flight internal nets are ultra high frequency or very high frequency nets that link all aircraft in each serial.

e. Fire support nets are established by the artillery adviser to control assigned fire support assets.

f. Landing area control nets are established by the ground force at each landing area to control the flow of aircraft and to coordinate the link-up of ground and air elements. This may not be a discrete net and should be monitored by aircraft in the immediate vicinity of the landing area.

Planning and Conduct

1415. Some phases of an airmobile operation may occur concurrently. Phases are:

a. staging,

b. loading,

c. air movement,

d. landing, and

e. ground tactical.

1416. As with other airborne operations, the reverse planning process is used. Following the conduct of an appreciation, the ground tactical phase is considered first. The remaining phases are subsequently developed to support the ground tactical phase. Although airmobile operations are inherently rapid in execution, the time required for planning and for preliminary operations may be extensive.

1417. Planning of the ground tactical phase should consider:

a. mission,

b. enemy reaction to airmobile operations,

c. H-hr,

d. requirement for preliminary operations,

e. selection of landing areas,

f. number of landing areas (main and alternatives),

g. lift capacity,

h. light and weather conditions,

i. security of landing areas,

j. rallying,

k. surprise, and

l. link-up.

1418. Selection of landing areas should be based upon reconnaissance. As a minimum, air photo reconnaissance should be employed. In the best case, actual site reconnaissance should be effected by ground forces. Special forces are especially suited to this task.

Landing Phase

1419. Planning of the landing phase should consider:

a. guides,

b. aircraft sortie and serial distribution,

c. landing formations,

d. requirements for preparation and covering fire,

e. pre-landing briefings, and

f. build-up of forces.

Air Movement Phase

1420. Planning for the air movement phase should consider:

a. organisation of the lift (by chalks);

b. routes;

c. navigation methods, including pathfinding;

d. aircraft altitude;

e. aircraft formations;

f. action en route;

g. suppression of enemy air defence;

h. downed aircraft;

i. control of movement, including initiating points, air control points and fire support coordination;

j. airspace control; and

k. refuelling and rearming.

Loading Phase

1421. Planning for the loading phase should consider:

a. pick-up zones,

b. marry-up of ground and aviation elements,

c. sequencing (governed by the ground tactical phases),

d. loading formations,

e. chalks, and

f. pick-up zone control party.

Staging Phase

1422. Planning for the staging phase should consider:

a. dispersion within staging areas,

b. preparation of stores and equipment, and

c. use of ground and fixed-wing tactical transport to concentrate the forces.

1423. Airmobile operations will require the coordinated application of resources in order to succeed. Accordingly, the main plan for the operation will be augmented by a number of supporting plans. Included in these will be:

a. fire support plan,

b. air defence plan,

c. deception plan,

d. communications, and

e. electronic warfare plan.

Extraction

1424. An airmobile force may be extracted to redeploy, to withdraw from an untenable position or at the completion of an operation. Withdrawal of a force not in contact uses the reverse planning process; if the force is in contact then the critical area is the pick-up zone time (H-hr). Air movement cannot be planned until the forces necessary to hold and protect the pick-up zone and the order of withdrawal have been determined.

1425. Pick-up zones should be as close as possible to troop positions and covered from enemy view. Use of a number of alternatives is preferred. If a single pick-up zone is to be used, then it should accommodate minimum lifts to extract all troops.

Night Operations

1426. Night airmobile operations provide advantages in surprise, the creation of confusion in the enemy and maintenance of the momentum of daylight operations. The risk of losing control is greater than for daylight operations but this may be reduced by maximum use of night vision equipment. An illumination plan may be required.

1427. Reconnaissance for night airmobile operations should be conducted by both night and day if security is not likely to be prejudiced. Landing areas should be located close to the objective and should incorporate a straggler control point at an easily recognisable point.

Administrative and Logistic Planning

1428. The reverse planning process is applied to the administrative and logistic planning for an airmobile operation. Key factors are:

a. expected intensity and duration of the operation;

b. size and composition of the force;

c. availability of facilities, equipment and supplies;

d. type and availability of transport; and

e. aeromedical evacuation and prisoner of war backloading requirements.

Factors to be Considered for Airmobile Operations

1309. Paragraph 424 details the broad operational factors to be considered when selecting landing areas. The importance of these factors cannot be overstated. They must be considered in conjunction with the equally critical factors affecting aircraft operations outlined in ADFP 14 - *Air Transport.*

1310. The following is a general list of aircraft operating factors against which the acceptability of LZ can be determined:

a. Minimum standard dimensions and markings must conform to those contained at Annex B to this chapter.

b. Solid obstacles, inflammable material and loose items must be cleared from the area. The term `cleared to ground level´ is used to indicate this. Vegetation which binds soil together (low shrubs and grasses, for example) which are not essential to be cleared, should be left in place to reduce dust hazards.

c. The central area of the landing point must be hard enough to support a fully-laden helicopter. As a guide, the ground should be firm enough to allow a loaded vehicle (800 kg for light helicopters; 7000 kg for larger helicopters) to stop and start without sinking.

d. There must be an obstruction-free approach and exit paths into the prevailing wind. For helicopter operations, obstruction angles up to 30 degrees may be accepted but some helicopters may need to operate at a reduced weight. Approach and exit corridors must be without obstacles.

e. The whole landing point should be cleared of any loose materials or piles of dust or sand which could be blown up by the rotors of the helicopter.

f. The ground should be relatively level and the slope should not exceed seven degrees (1 in 8 or 125 mils) if the helicopter is to land.

g. Landing sites and landing points should be marked when circumstances allow. Panels and other markers should be firmly secured. Markings should be kept to a minimum and only displayed when actually required in order not to disclose positions to the enemy.

1311. The identification of landing sites may be effected by one of the following methods:

a. Marker balloons may be tethered at the LZ but should be lowered once the helicopters have acknowledged recognition.

b. Coloured smoke, flashing lights (infra-red at night) or pyrotechnics may be used, but to prevent deception by the enemy, the following identification sequence is recommended:

(1) ground unit displays identification on request,

(2) helicopter pilot states what has been seen, and

(3) ground unit confirms.

c. A prearranged display of code identifiers may be laid out.

1312. LZ are designated by colour or codeword; landing sites are designated by LZ colour or codeword followed by a number. Where unit LZ are larger, the number of landing sites can be zoned by geographical or sub-unit areas. Thus the landing sites in one company area may be known as RED 30, RED 31, RED 32, etc and in another company area the landing sites may be designated BLUE 40, BLUE 41, etc.

1313. For night operations, the dimensions of landing points should be double the size for day operations. Additionally, thought must be given to the approach and exit corridors in respect to angle and arc. The normal maximum obstruction angle is six degrees measured from the outer edge of the area cleared to ground level. The approach and exit corridor width between obstructions extending above the six degree obstruction angle should be twice the cleared to ground level dimension of the night landing point.

1314. Lighting systems available for field use range from a single, steady point source of light to specially designed optical arrays. Use of a flashing or strobe light, unless fitted with infra-red shields, is not permitted other than in an emergency. Personnel responsible for laying out visual approach aids for night operations should consider the following:

a. The pilot must be able to distinguish the approach aid from other lights in the area. This can be achieved by the use of a prearranged code identifier.

b. The pilot must be able to determine the required approach direction and if applicable the safe approach angle in the vertical plane (glide path). This is the basis for classification of lighting systems and highlights the need for their accurate placement.

c. All lighting systems must be securely fixed to prevent them being blown over or extinguished by the helicopter downwash.

d. Directional light sources such as torches, vehicle lights and shielded lights should be aligned along the directions of approach.

e. Communications are complementary to night visual aids. For instance a verbal description of the LZ and approaches would enhance the effectiveness of the visual aids available. Communications should only be used within emission control guidelines. Where possible a detailed verbal brief should be given to the aircrew by the user unit prior to the mission.

Annexes:

A. Helicopter Tactical and Non-permanent Landing Sites

B. Hercules (C130) Landing Zone Requirements

C. Caribou (DHC4) Landing Zone Requirements

HELICOPTER TACTICAL AND NON-PERMANENT LANDING SITES

1. This annex sets out the minimum standard dimensions and markings for helicopter tactical or non-permanent landing sites. Standard dimensions and markings for permanent landing sites are detailed in DI(AF) AAP 382 - *Manual of Air Traffic Control* and CAA AIP AGA-7.

Explanation of Terms

2. The term `cleared to ground level´ indicates that solid obstacles, inflammable material and loose items are cleared. It would not, for instance, be necessary to clear grass up to 0.3 m covering a level field, unless a fire risk existed. The term `hard surface´ is defined at subparagraph 1310.c.

Day Operations

3. The size of a landing site will depend on the number of landing points within it. The criteria below represent the ideal dimensions and separation of four agreed categories of landing points. Helicopter units will designate the landing point (LP) as size 1, 2, 3 or 4, to be used by their units for specific operations. Recommended distances (centre to centre) between landing points within a landing site are as shown in figures 1, 2, 3 and 4:

a. Size 1 LP - 25 metres, eg Kiowa or Squirrel;

b. Size 2 LP - 37 metres, eg Iroquois or Blackhawk;

c. Size 3 LP - 50 metres, eg Chinook or Seaking; and

d. Size 4 LP - 100 metres.

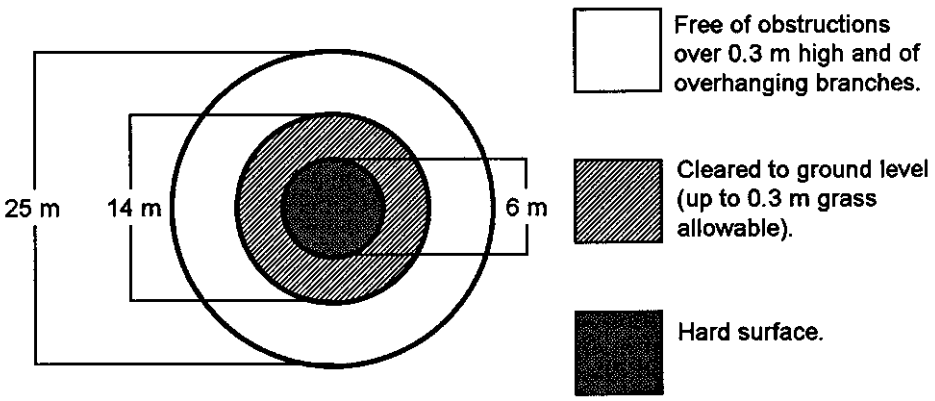

Figure 1 - Size 1 Landing Point

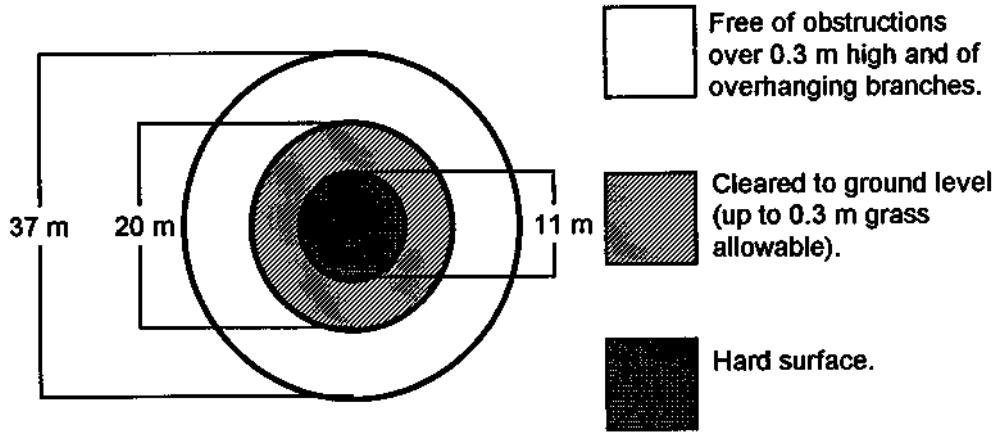

Figure 2 - Size 2 Landing Point

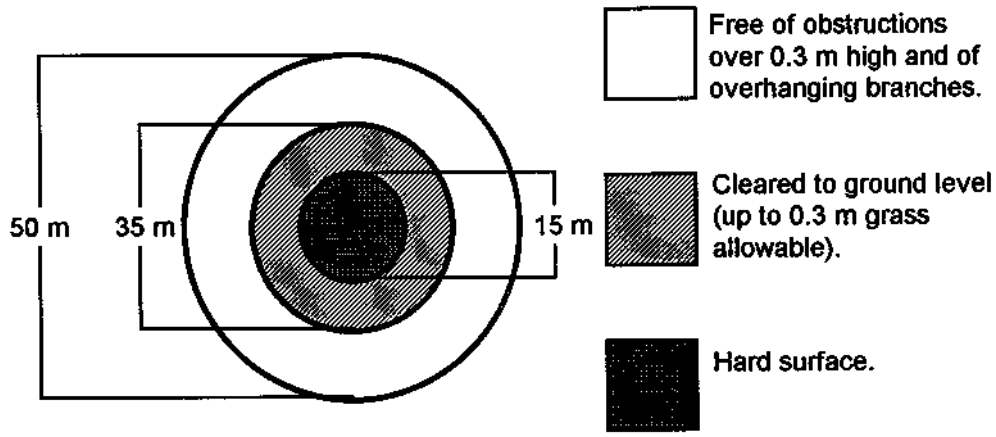

Figure 3 - Size 3 Landing Point

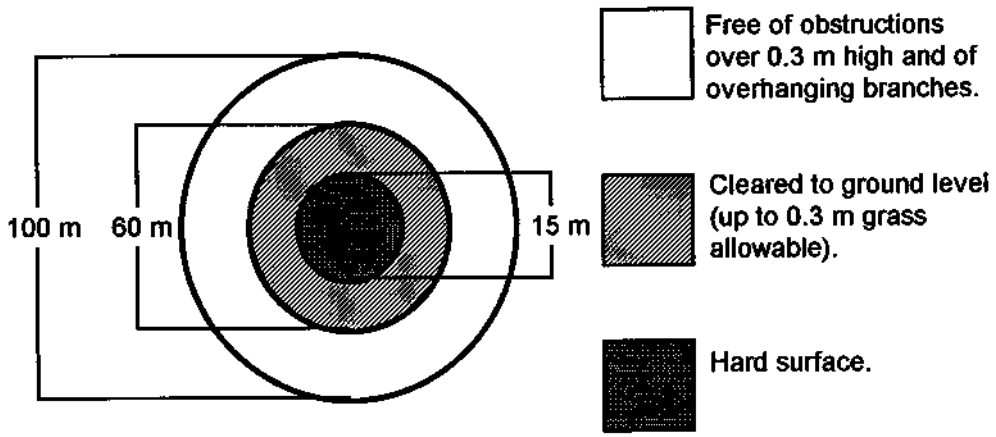

Figure 4 - Size 4 Landing Point

4. There should be obstruction-free approach and exit paths into the prevailing wind. In conditions of light wind, a single approach/exit path is acceptable. The normal maximum obstruction angle should be six degrees (see figure 5). For Army Blackhawk helicopter operations, obstruction angles up to 30 degrees may be acceptable to a helicopter unit. For Army Iroquois operations, steep departures will incur a payload penalty. The approach and exit corridors should allow for a minimum corridor width of twice `cleared to ground level´ diameter for the category of landing point.

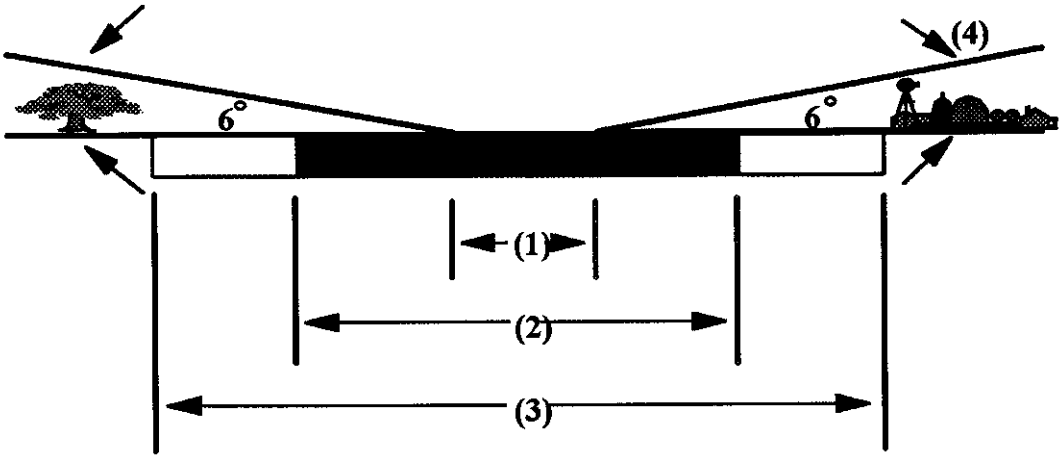

Figure 5 - Landing Point Obsyruction Angle

Notes:

1. Hardstanding (cleared to ground level).
2. Cleared to ground level but .3 m grass acceptable.
3. Free from obstruction over .3 m high.
4. Maximum obstruction angle (six degrees or 107 mils).

5. The surface of the centre of the landing point must be even and sufficiently firm to support a fully-laden helicopter. The whole landing point must be cleared of any loose materials or piles of dust or sand which could be blown up by the rotors of the helicopter. Landing sites with sandy or dusty surfaces should be stabilised or covered by an agreed method. Any snow on the landing point must be packed or removed to reveal any hazardous objects and reduce the problem of blowing snow. A marker is essential to provide a visual reference for depth perception and also to reduce the effect of whiteout.

6. The ground slope should not exceed 10 degrees (1 in 8 or 125 mils), for Blackhawk and seven degrees for Iroquois. (Army Blackhawk aircraft may be shut down on a maximum of 10 degrees slope and Iroquois on seven degrees slope.)

7. Landing sites and points should be marked when circumstances allow. Panels and other markers are to be firmly secured or removed before the helicopter hovers so they do not blow into the helicopter rotors or engine intakes. Markings should be kept to a minimum and only displayed when actually required in order not to disclose positions to the enemy.

8. A landing site where possible should be below the line of sight of enemy ground observation with an approach/exit route giving similar cover.

9. The identification of landing sites may be effected by:

a. marker balloons, which should be lowered once the helicopters have acknowledged recognition;

b. coloured smoke, flashing lights or pyrotechnics, which should be used in the following identification sequence to prevent deception:

(1) ground unit displays identification on request,

(2) helicopter pilot states what has been seen, and

(3) ground unit confirms; or

c. a prearranged display of figures or letters in accord with paragraph 1311.

Night Operations

10. During aided night operations (crew equipped with night vision goggles), daytime landing point dimensions should be adequate. However, hazards such as dust, rain, wires or other obstacles may make a landing point unsuitable. The use of night vision goggles reduces visual depth perception and so consideration should be given to the use of oversize landing points. The aircraft captain is the final authority in determining suitability.

11. For night unaided operations, landing points are to be double the dimensions of day landing points, ie double the size 2 landing point for Army Blackhawk/Iroquois aircraft.

12. The normal maximum obstruction angle is six degrees measured from the outer edge of the `cleared to ground level´ area. The approach/exit corridor width between obstructions extending above the six degree obstruction angle is to be twice the `cleared to ground level´ dimension of night landing points.

13. The use of a white search or landing light by the aircraft on an unaided approach is at the captain`s discretion. Approach aids incorporating two or more light sources should provide the pilot with sufficient rate of closure and glide slope information to negate the need for white light in most conditions.

Night Visual Approach Aids

14. Visual approach aids consist of the standard `T´, crossed vehicle lights, single point light source, Bardic lights, standard NATO `Y´ aid or fixed-wing runway lighting. Personnel responsible for laying out visual approach aids for night operations should consider the following:

a. The pilot must be able to distinguish the approach aid from other lights in the area.

b. The pilot must then be able to determine which is the required approach direction and if applicable the safe approach angle in the vertical plane (glide path). This is the basis for classification for lighting systems.

c. All lamps, flares or torches must be securely fixed to prevent them being blown over or extinguished by the helicopter downwash.

d. Torches should be aligned along the direction of approach.

e. Communications are complementary to night visual aids. A verbal description of the LZ and approaches will facilitate helicopter operations into it and thus enhance the effectiveness of the visual aid available.

15. Lighting aids used (excluding Bardic lights) are two-dimensional (planar) and offer the pilot guidance to direction of approach. They are limited in that they do not give a positive indication of glide path nor safe clearance above obstacles and thus may be unacceptable in some conditions of weather and terrain. Three systems are described below:

a. A Standard `T´ consists of five lights (torches or better) laid out at 10 metre intervals forming a `T´ 20 metres x 20 metres to the right of the landing point centre (see figure 6). For helicopters carrying external loads, the lights should be set at the upwind end of the landing point, so that the hover point is close to the landing point centre.

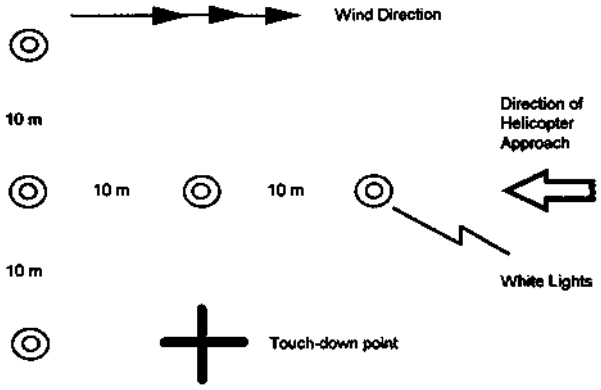

Figure 6 - Standard `T´

b. The crossed vehicle lighting system offers similar approach information to the Standard T and has the advantage of being very easy to set-up or change. It consists of two vehicles, 35 metres downwind, with headlight beams crossing at the landing point centre (see figure 7). Blacked-out vehicle lights are not suitable for use as an approach aid.

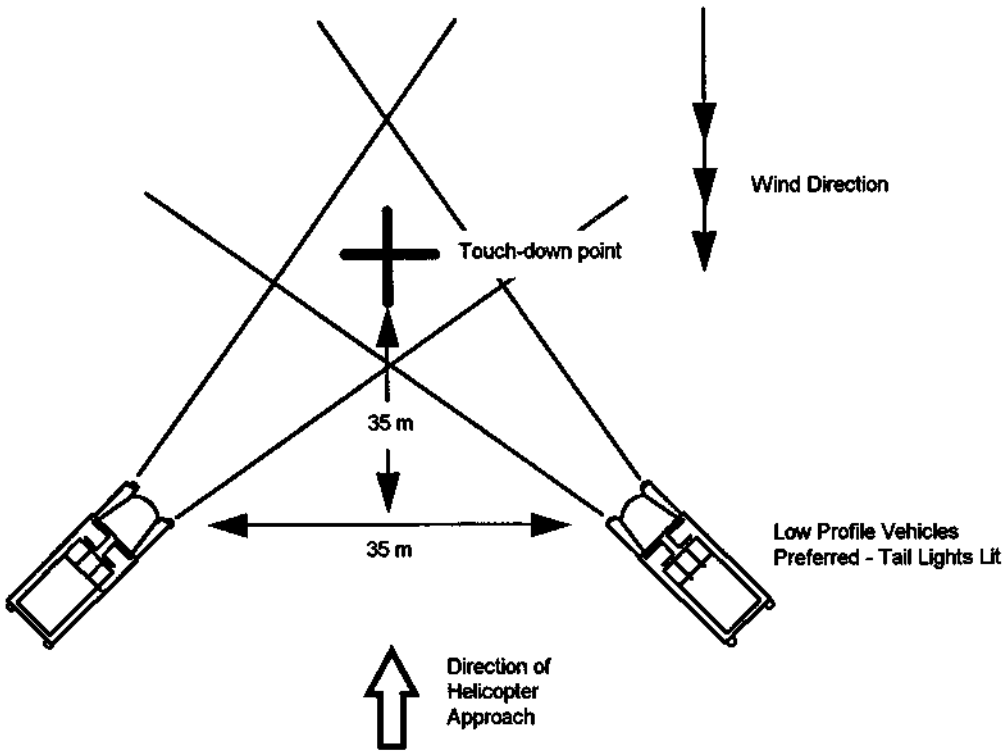

Figure 7 - Vehicle Headlights

c. The single point light source is non-directional and only locates the landing point. It gives no indication on approach direction or glide path. The point source of light is usually a torch or lantern and should be set up in an otherwise dark area to aid identification. It is the minimum allowable approach aid and may well be unacceptable in some conditions of weather or terrain. The source may be a combination of a steady lantern and a flashing lantern, one metre apart.

16. Lighting requirements depend upon landing point dimensions, ambient lighting conditions and crew familiarity with the landing point. In some cases one of the unaided lighting systems would be the best choice. In other circumstances there may be no lighting aid requirement. As a minimum, supported units should provide a single light source (using cyalume sticks) or have a marshaller holding two cyalume sticks aloft facing the approach direction.

Parking

17. Spacing of helicopters for parking purposes is dependent upon taxi clearances. Helicopters are not to be taxied within one rotor diameter of parked aircraft or other obstacles which are liable to be contacted by the rotor. If marshalling facilities are used, or surveyed taxi centre lines are provided, aircraft may be taxied to within half a rotor diameter of parked aircraft or other obstacles liable to be contacted by the rotor. Spacing between parked aircraft is to be calculated on the basis of parked aircraft with rotors turning.

18. Army Blackhawk helicopters should be spaced 35 metres apart for parallel parking (without marshallers or centre lines), and 35 metres apart if tail parking is required. Iroquois should be spaced 30 metres apart for parallel parking and 35 metres apart for in line nose to tail parking.

19. Notwithstanding the above, when helicopters from nations conforming to ASCC Air Standard 44/33 are involved in operations in Australia, parking separation is to be the same as the recommended landing point separation in the Air Standard, ie 35 metres for Size 2 LP (Blackhawk and Iroquois aircraft).

HERCULES (C130) LANDING ZONE REQUIREMENTS

1. This annex provides the minimum standard for tactical landing zones and temporary tactical lighting suitable for C130 operations.

Landing Zone Dimensions

2. Minimum length is the greater of 915 m (3000 ft) or critical field length as determined by the applicable performance manual.

3. The minimum lateral dimensions and ground clearance requirements for a C130 landing zone are depicted in figure 1. The landing zone is divided into four parallel sections: the runway, shoulder, clear area and lateral safety zone. The minimum requirements for each section are:

a. runway - 18 m wide and cleared to ground level;

b. shoulder - three metres wide and cleared to ground level;

c. clear area - 12 m wide and cleared to 0.5 m above ground level;

d. lateral safety zone - 20 m wide and cleared to 1.0 m above ground level; and

e. overrun/underrun - 100 m long and cleared to the same lateral dimensions as the landing zone.

Approach/Departure Zone

4. The approach/departure zones are bounded by the runway threshold and lines diverging at eight degrees from the clear area, extending to six km as depicted in figure 1. An approximate method of determining the lateral limits of the approach/departure zone is also depicted in figure 1.

5. The minimum obstacle free gradient for a C130 landing zone is depicted in figure 2. There is to be no vertical obstruction infringing a two degree glide path, which corresponds to a gradient of 1:30 or three per cent, within the approach/departure zone. An approximate method of determining the obstacle free gradient is also depicted at figure 2.

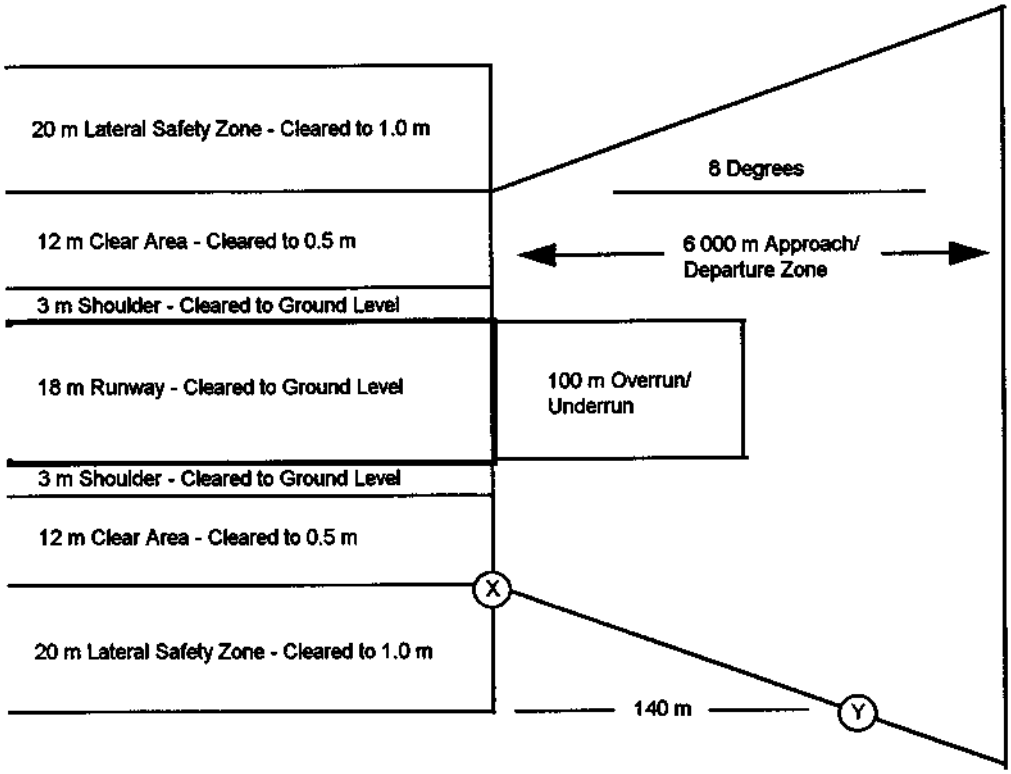

Figure 1 - Minimum Landing Zone Dimensions

Note:

1. To determine the lateral limits of the approach zone, a person walks out from the threshold along the outer edge of the lateral safety zone 140 m to Y. A second person standing at the intersection of the threshold and outer limit of the clear area X now sights to the person at Y.

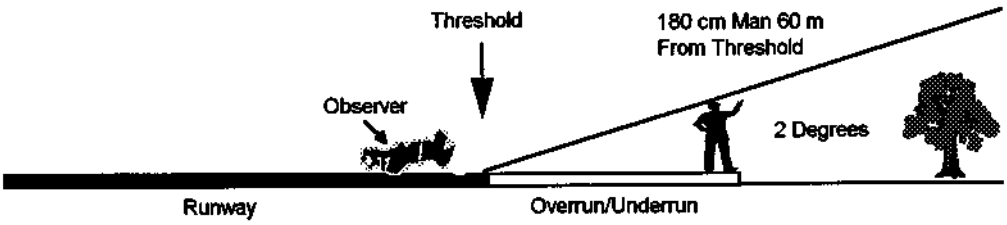

Figure 2 - Obstacle Free Gradient

Note:

1. An observer positioned at the edge of the overrun/underrun at ground level sights a 180 cm man 60 m away. The gradient between the two roughly corresponds to the required gradient.

6. Where an aircraft turning area is required, as depicted in figure 3, the requirements are:

a. a minimum radius of 30 m centred on the last runway light about which the aircraft will turn clockwise,

b. cleared to ground level for the first 10 m of radius and to 0.5 m for the remainder, and

c. cleared of all objects which would cause damage if traversed by undercarriage or fuselage.

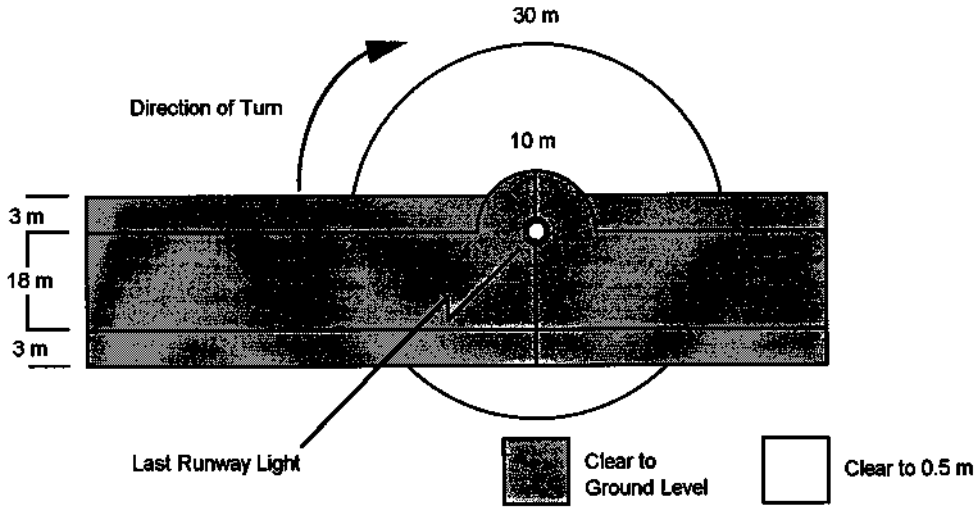

Figure 3 - Turning Area

7. The following surface criteria must be satisfied before an LZ is suitable for C130 operations:

a. The runway is to be clear of objects and loose rocks which could:

(1) damage the aircraft,

(2) endanger personnel or ground equipment due to propeller slip-stream, or

(3) obstruct the view of the LZ lighting.

b. The following runway roughness is acceptable for C130 operations:

(1) Recurrent localised obstructions or discrete bumps (stones, protruding rocks, steps between concrete slabs) not more than 100 mm high (150 mm for soil only) and substantially less than the width of the aircraft tyre under load in the projected area (generally not more than 375 x 375 mm).

(2) Wedge shaped bumps not more than 200 mm high with a leading slope no steeper than one in 50, spaced more than 45 m apart.

(3) Ruts not more than 75 mm deep.

(4) Hollows not more than 375 mm across, 150 mm deep and located at least six meters apart.

c. A survey of a landing zones drainage pattern and capability is to be conducted. This survey should detail whether moisture on the runway will restrict operations or make the strip unusable. Considerations are:

(1) the surrounding topography, especially if situated in an area of low ground or a high water table, eg river bank, swamp, coastal; and

(2) the material used in the construction of the LZ and its ability to absorb moisture, eg clay soils vs crushed rock.

8. The lateral and longitudinal surface slope limits are depicted in figure 4. Longitudinal grade changes in the first 152 m from either end of the runway should be avoided. After these sections, longitudinal grade changes should not occur more than twice in any given 120 m.

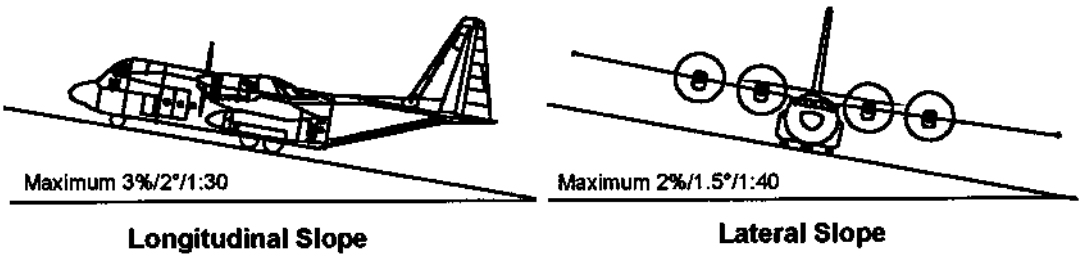

Figure 4 - Landing Zone Surface Slope Limits

Landing Zone Lighting

9. The standard tactical airfield lighting system requirements for landing areas are depicted in figures 5 and 6. Figure 5 depicts the minimum lighting required for tactical airland operations on an ALG complying with the minimum LZ dimension requirements. Figure 6 depicts the minimum lighting required for ALG longer than the minimum length.

10. The tactical lighting depicted is the minimum acceptable and provides sufficient visual cues for trained and current crews to conduct safe operations. To avoid altering aircrew perceptions the set distances between lights are not to be varied outside the limits provided in figures 5 and 6. Where runway width and length exceeds the minimum required, the tactical airfield lighting system is to be overlaid on the longitudinal and lateral centrelines. Extra lights are not to be used unless requested by the crews or the authorising officer, and then the additional light locations are to be accurately briefed.

Landing Zone Selection

11. The initial selection of an LZ may be done by either the Army or RAAF. An LZ will not be utilised until completion of a survey comprising:

a. detailed assessment by a current C130 captain, and

b. bearing capacity assessment by a qualified engineer.

12. If an aircraft captain considers that a potentially hazardous situation exists that cannot be corrected the LZ will not be used.

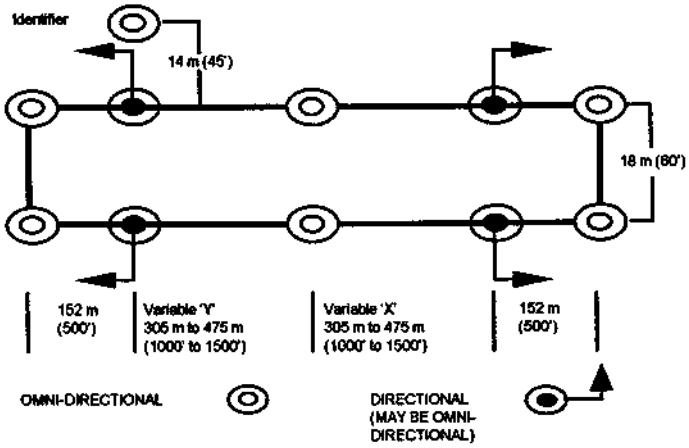

Figure 5 - Tactical Airfield Lighting System (Minimum Length ALG)

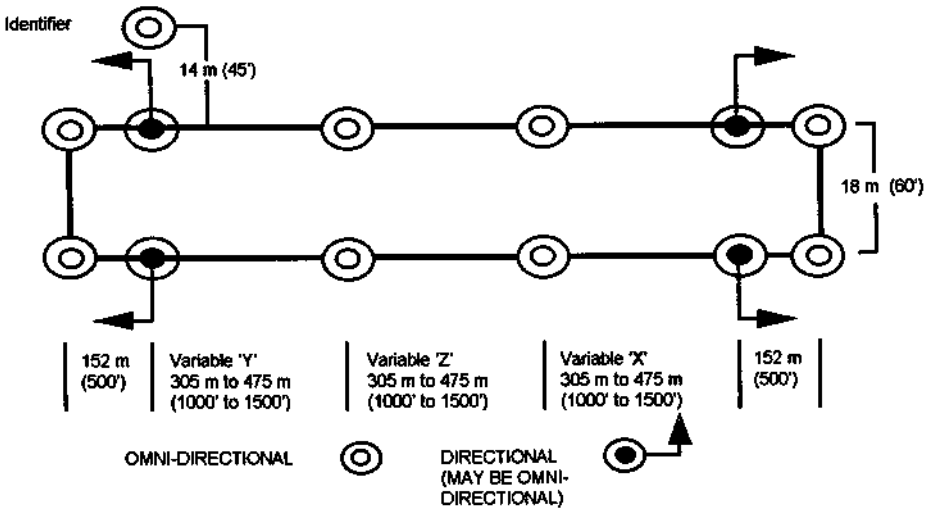

Figure 6 - Tactical Airfield Lighting System (Greater Than Minimum Length ALG)

Notes:

1. Figure 5 depicts the lighting requirements for a minimum length ALG. When variables `X´ and `Y´ are 305 m this represents the minimum runway length of 915 m. Variables `X´ and `Y´ may be increased to 475 m to provide lighting for landing zones of 1067 m and 1220 m in length.

2. Figure 6 depicts the lighting requirements for an ALG greater than 915 m. Variables `X´ and `Y´ may be increased to 475 m to provide lighting for landing zones of 1372 m and 1524 m in length. A further 152 m length may be included by increasing the variable `Z´ to 475 m.

3. The ideal heights for lights is 15 cm above the ground or higher if required to clear longer grass. Whatever height is chosen it should be uniform for all lights. In addition, all Tactical Airfield Lighting System lights should be visible when standing at the approach threshold, for a minimum distance of 915 m.

4. For a take-off the minimum lighting requirement is two lights placed either side of the upwind threshold to provide directional cues.

5. The minimum acceptable light source should be a light with intensity equal to a `D´ cell torch with fresh batteries. This can normally be achieved with each light source consisting of eight hexamine tablets or four cyalume sticks. Propeller blast will scatter lights if they are not secured and will extinguish hexamine tablets.

6. Lights are not to be hand held.

7. All lights may be omnidirectional. The identifier light is to be positioned at the preferred approach end of the runway.

CARIBOU (DHC4) LANDING ZONE REQUIREMENTS

1. The criteria below are to be used to determine the suitability of an airfield flight strip for Caribou operations. Operations into strips that do not meet the criteria must be specifically authorised by the commanding officer or executive officer of the operating unit.

2. Minimum flight strip criteria for Caribou operations are as follows and as shown at figures 1 and 2:

a. Day operations criteria are:

(1) Length as determined by take-off and landing data calculations.

(2) Width of 12.5 metres cleared to ground level.

(3) Shoulders to three metres on each side of the runway unobstructed at ground level.

(4) 15 metres outside of the runway shoulders cleared to one metre above ground level. Bushes and shrubs higher than one metre are to be cleared by cutting at ground level.

(5) Longitudinal slope is not to exceed 10 per cent.

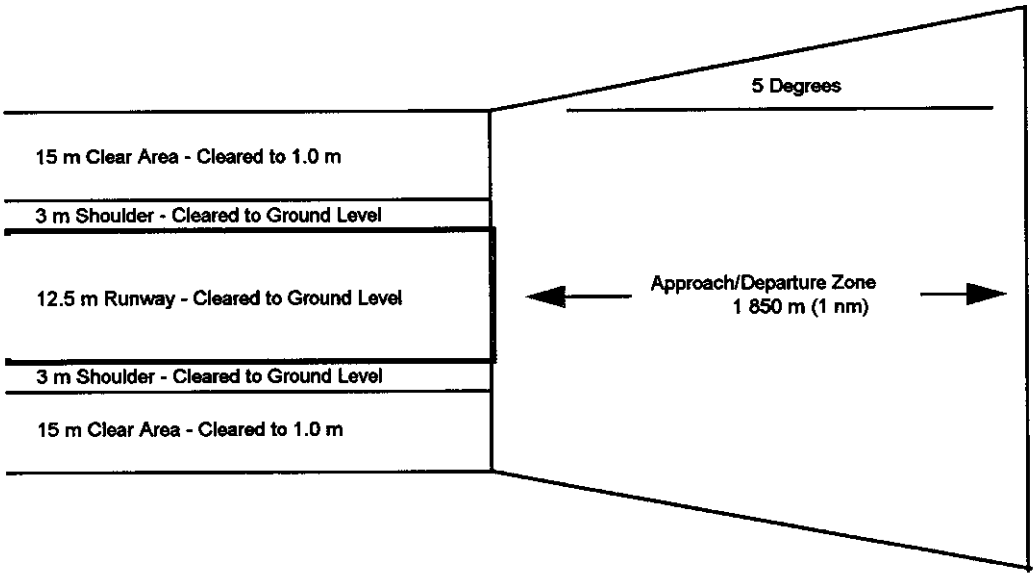

Figure 1 - Minimum Flight Strip Criteria - Day Operations

b. Night operations criteria are:

(1) Length of 600 metres plus an unlit undershoot of 60 metres.

(2) Width of 18 metres cleared to ground level.

(3) Shoulders are as for day operations.

(4) Clear area is as for day operations.

(5) Longitudinal slope is not to exceed 5 per cent.

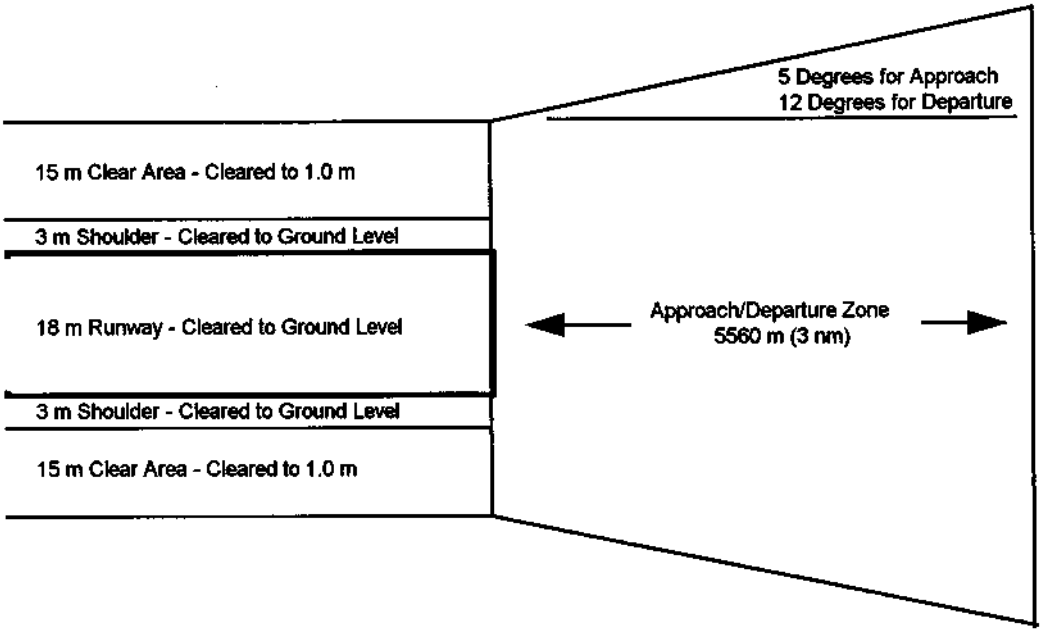

Figure 2 - Minimum Flight Strip Criteria - Night Operations

c. Other parameters which must be assessed by a strip surveying officer are as follows:

(1) Grass is not to exceed 300 millimetres in length and must not pose a fire hazard in proximity to hot brakes. Wet grass will severely degrade acceleration and braking performance.

(2) Transverse slope is not to exceed 2.5 per cent.

(3) The approach zone (see figures 3 and 4) is bounded by the threshold which diverges at an angle of 5 degrees from the minimum flight strip width edges. This extends to a distance of one nautical mile by day and three nautical miles by night. Obstacle clearance gradient within the approach zone is not to exceed 7 per cent (4 degrees) by day and 3.5 per cent (2 degrees) by night.

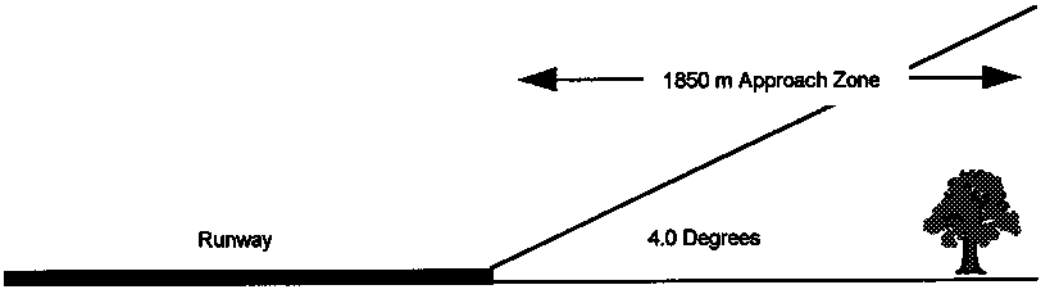

Figure 3 - Approach Zone Gradient - Day Operations

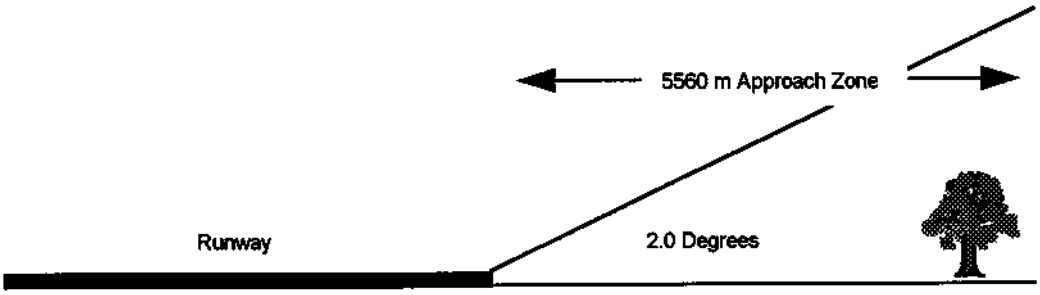

Figure 4 - Approach Zone Gradient - Night Operations

(4) The departure zone (see figures 5 and 6) is bounded by the departure end of the runway or, where a runway exceeds 600 metres in length, a take-off distance of 600 metres. By day this extends at an angle of 5 degree divergent from the minimum flight strip width edges to a distance of one nautical mile. By night this extends at an angle of 12 degree divergent from the minimum flight strip width edges to a distance of three nautical miles. Maximum obstacle clearance gradient in the departure zone is to be 2.5 per cent (1.4 degree) day or night. Bushes or trees up to six metres high situated within the departure zone may be disregarded. For night operations a navigable route should be available to permit climb from the departure end of the runway to minimum en route altitude with a rate of climb no greater than 1.5 per cent (0.9 degree).

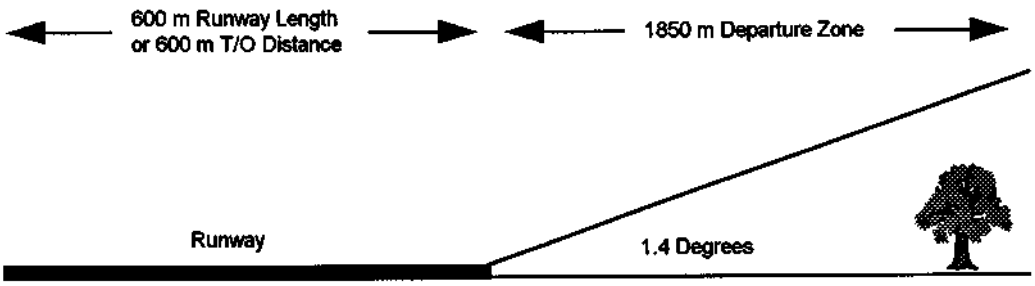

Figure 5 - Departure Zone Gradient - Day Operations

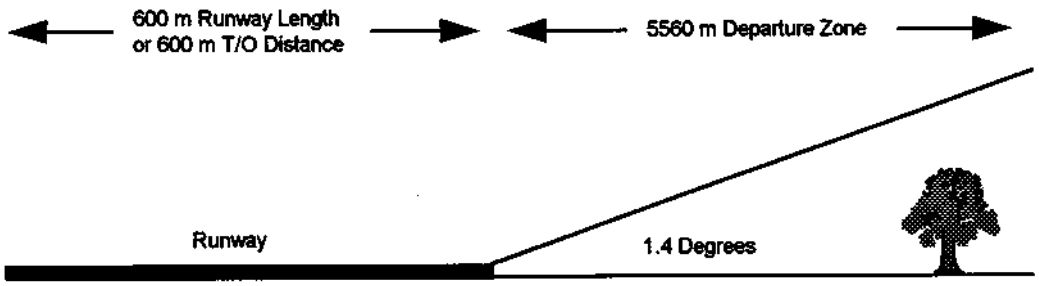

Figure 6 - Departure Zone Gradient - Night Operations

Note:

1. Take-off distance available is measured from the first set of lights.

(5) The maximum change in runway heading is 5 degrees. If the strip has a bend of more than 5 degrees, the longest straight stretch is to be regarded as the runway and the area beyond is to be shown as the taxiway.

(6) Minimum advanced landing ground lighting requirements are detailed at figure 7.

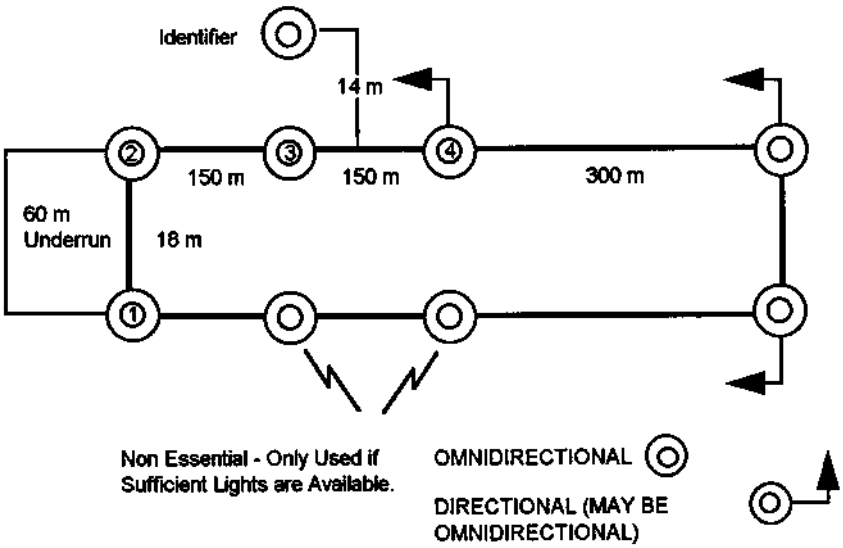

Figure 7 - Minimum Night Lighting (ALG)

Notes:

1. Lights 1 to 4 must be placed in the positions shown and be of equal intensity.
2. The identifier light is not required once the aircraft is established on final approach.
3. From any left hand side light the next left hand side light must be clearly visible.
4. For take-off, only the end of runway lights are required, provided they are clearly visible from the departure point.
5. For ground operations a flashing light should be placed to mark the desired position of the left wing tip for parking. Unless a parking area is marked, all manoeuvring is to be carried out on the runway unless specifically briefed otherwise.

3. Before operations are commenced on a strip for which no reliable source details are obtainable, the strip is to be surveyed by a Category B qualified Caribou captain (or suitable Category C if no Category B is available). Reliable airfield source details are:

a. RAAF Flight Information Publications - En route Supplements Pacific and Australasia;

b. Royal Flying Doctor Service Reports;

c. airfield survey reports held by AHQAUST, ALG, 84 WG, 35 SQN, 38 SQN, 35 SQNDETA or 38 SQNDETA; and

d. other source information to the satisfaction of the authorising officer.

4. Before using any airfield on friendly or neutral territory, permission must be obtained from the owner or relevant Government authority, consistent with operational security considerations.

5. A take-off may be made within crosswind limits, except when weather conditions at the departure field are below the limits required for landing with available aids. Captains and authorising officers are to ensure a suitable alternative strip is available within 30 minutes flying time from the departure airfield, with flight to that alternative on one engine at the required safety height.

SELECTION AND MARKING OF DROP ZONES

1. The major factors considered in the selection of DZ are:

a. enemy dispositions and capabilities,

b. command and control,

c. proximity to objectives,

d. recognition from the air,

e. type of operation to be conducted,

f. suitability of surface for type of drop,

g. urgency of the proposed mission,

h. natural and man-made hazards,

i. aircraft and equipment limitations,

j. location and spacing from other DZ,

k. size of available area for force or equipment to be dropped,

l. availability of supporting assistance from friendly forces,

m. availability of information and suitable maps or photographs,

n. weather, and

o. likelihood of successful transit and landing.

2. When selecting a DZ, consideration must be given to the size of the impact area required for the type and number of paratroops and equipment to be dropped in one run. Detailed considerations are contained in appendix 1. Variable factors applicable to the aircraft performance, the airdrop system, weather conditions, aircrew capabilities and the performance of airdropped items should also be considered. Key factors are:

a. aiming accuracy at release;

b. scatter factor for multiple ejection or extraction;

c. stick length;

d. exit height;

e. meteorological effects during the drop;

f. suspended weight per parachute type;

g. drift in distance per unit of windspeed;

h. forward throw prior to balanced suspension;

i. ground area available, or required;

j. types of surface such as grass and sand; and

k. height of DZ above mean sea level.

Specific factors for free-fall and static-line DZ are shown at appendixes 2 and 3.

Information Check List

3. To enable the force commander, GC and AEC to jointly select DZ and determine their capacity, the following information is required:

a. survey map references;

b. coordinates by latitude and longitude and grid meridian system for the point of impact;

c. height of:

(1) point of impact (in feet above mean sea level), and

(2) highest point of DZ (in feet above mean sea level);

d. coordinates of DZ;

e. dimensions:

(1) useable length (in metres), and

(2) useable width (in metres);

f. DZ axis;

g. description of surface of impact area or areas;

h. maximum drop height (in feet above ground level);

i. recommended primary and alternative run-in and run-out track (in degrees magnetic);

j. description of undershoot area;

k. description of overshoot area;

l. location and description of obstructions and hazards;

(1) in DZ area,

(2) within target approach point radius of DZ, and

(3) within initial point radius of DZ;

m. access road facilities;

n. suitability for:

(1) personnel drops,

(2) platform drops,

(3) supply drops,

(4) low altitude parachute extraction system drops, and

(5) combined personnel/platforms/supply drops;

o. maximum stick sizes for controlled, continuous and simultaneous double-door exit;

p. meteorology;

q. code identifier:

(1) grid,

(2) coordinates,

(3) type, and

(4) signal; and

r. in peacetime, a report on:

(1) nearest civil or military airfield for diversion or emergencies,

(2) nearest civil or military hospital, and

(3) communications.

4. In large scale airborne assault operations the above information may well be known to the planning staffs. For smaller scale operations it should be completed by the unit requesting the mission. As much information as is available should be included in the mission request when the DZ is first used.

5. A DZ report is usually approved by the commanding officer of an airborne unit. The report is classified appropriate to the target and is usually accompanied by:

a. relevant scale maps for air and ground use,

b. aerial photographs and interpretation reports, and

c. detailed sketch maps or enlarged photographs.

Visual Markings and Signalling Devices

6. The following signals may be used to assist aircrew in the acquisition and recognition of DZ and should be detailed in the operation order or pilot mission brief:

a. Standard ground-to-air recognition panels (normally 0.6 x 2 metres) or the best available substitute such as canvas strips or cloth material must be used to compose the code identifier for the DZ in daylight operations. Panels should contrast with the surrounding terrain. These markings should normally be visible at a distance of not less than one and a half nautical miles from a height of 500 feet above ground level.

b. Raised angle markers may be used in lieu of panels for the code identifier or release point. The raised angle marker is made from the same materials as panels, in a triangular shape two metres high.

c. Vertical markers may be used as side markers on DZ. To be effective they should be at least two metres tall, and visual acquisition should occur at not less than one and a half nautical miles from a height of 500 feet above ground level.

d. During darkness, DZ are to be marked by lights which should normally be visible at a distance of not less than one and a half nautical miles from a height of 500 feet above ground level. The lights should be easy to extinguish or conceal and, if possible, should only be visible from the direction of approach. Additional lighting (flashing lights, strobes, flashing code identifier) may be required.

e. Smoke may be used to give an indication of wind direction, except that:

(1) red smoke is not to be used to indicate wind direction; and

(2) the smoke is to be so sited that the code identifier is not obscured from the aircrew. When approved the code identifier can be replaced by smoke alone.

f. Pyrotechnics or flares may be used to enhance acquisition of the DZ. Colours selected, operating techniques and actions are to be detailed.

g. Other signalling devices such as tethered balloons, heliograph mirrors, laser target designators or jungle site markers (marker panels secured to the tops of trees in a jungle canopy) may be used subject to agreement between the force commander and the GC.

7. The visual markings listed above may be augmented by radio/electronic devices and by radio when communications security permits. Electronic and radio communications to aircraft are not to be used as primary signalling devices and are undesirable for use prior to and during drops.

Methods of Marking

8. Identification of a DZ is accomplished by display of a code identifier letter selected from: A, C, J, R, and S. Multiple DZ should be marked with a different code letter. Identification may be further defined by the addition of horizontal bars placed adjacent to, and to the right of the code identifier; up to four bars may be used. When using a DZ with different points of impact for personnel and cargo, each is to be marked with a different code identifier. The minimum acceptable size of letters as symbols for DZ markings is seven metres by seven metres; desirable size is 12 metres x 12 metres.

9. Where the nature of the terrain, area of operations and airdrop system used preclude the layout and marking of DZ as prescribed in appendixes 1-5, the devices used and methods of marking are to be agreed between the AEC and GC.

10. The markings for personnel and cargo DZ use during day or night aerial delivery operations are covered in appendixes 2, 3, 4 and 5.

11. A specified DZ used for the delivery of supplies or equipment by means of an extraction technique from aircraft flying very close to the ground is known as an extraction zone. The extraction process is activated as the aircraft approaches the extraction zone. After extraction and impact of the load, the extraction parachute augments ground friction. Systems using extraction zones are the low altitude parachute extraction system and ultra low level airdrop system. Markings and considerations for the low altitude parachute extraction system and extraction zone are contained at appendix 5.

Appendixes:

1. Drop Zones
2. Free-fall Drop Zones
3. Static-line Drop Zones
4. Container Delivery System and Heavy Drop
5. Low Altitude Parachute Extraction Zones

DROP ZONES

1. This appendix contains details on the selection, dimensions, marking requirements and control of DZ. The details have been approved within the ADF, and conform to international standardisation agreements. These provisions are not intended to dictate policy for operational DZ, but should provide the basis for commanders to consider alternatives.

2. Planned parachute descents require a safe DZ, either on land or in water. A DZ should be free of any obstructions likely to cause injury or damage and must be large enough to accommodate the paratroops and supplies to be dropped onto it. Each type of DZ has its own requirements as outlined in subsequent appendixes.

3. The following methods of controlling the release of paratroops are contained in this part:

a. **Calculated Air Release Point.** The aircraft navigator is responsible for calculating the release point and positioning the aircraft over it to allow all paratroops to land on the designated DZ. The principle is to ensure that the first paratroop lands on the code identifier or point of impact.

b. **Ground Release System.** The DZ safety officer is responsible for calculating the release point, positioning markers and giving drop corrections to the pilot to ensure all paratroops or equipment land on the designated DZ.

c. **Dispatcher Controlled Release.** The dispatcher aboard the aircraft is responsible for calculating the release point and for positioning the aircraft over it to ensure all paratroops or equipment land on the designated DZ.

4. Relevant definitions are as follows:

a. Knots indicated airspeed is the speed of an aircraft measured in knots as displayed on the airspeed indicator.

b. Multiple DZ are a series of DZ adjacent to or in close proximity to each other. They may be for personnel, stores, or a combination of both.

c. Special operations DZ are those specifically set up for use by specially trained aircrews using night vision devices.

LAND DROP ZONES

5. When selecting a land DZ the following factors should be considered:

a. size of available area,

b. natural and man-made hazards,

c. local geography,

d. distance from mounting airfield,

e. aircraft limitations,

f. experience and currency of aircrew and parachutists,

g. meteorological aspects,

h. health facilities, and

i. command and control.

6. The available ground must be large enough to accommodate the required personnel or equipment. The minimum required dimensions for static-line and free-fall DZ are at appendixes 2 and 3.

7. DZ are not to be sited within 150 metres of live power lines, or within 500 metres of a hazardous body of water without the provision of life preservers. The latter distance is to be increased for static-line drops above 1200 feet above ground level, by 50 metres for every additional 100 feet. DZ should be free from:

a. trees, bushes and stumps other than light foliage over one metre high;

b. large rocks, natural objects or similar injurious material;

c. metal or wooden stakes;

d. fences;

e. buildings;

f. powerlines, and

g. vehicles (other than those for DZ control).

8. Some hazards may be acceptable on a DZ, such as single trees or fences. The acceptance of such hazards is the responsibility of the commander, who should consider the weather conditions, the level of experience of the parachutists and the type of parachutes being used.

9. The surface of a proposed DZ and the nature of the surrounding area will affect selection in a number of ways:

a. Flat open country is most suitable.

b. If the surface is undulating, choose level ground on the top of hills or ridges rather than re-entrants or valleys.

c. If a choice of sloping ground is unavoidable, choose a slope where the prevailing wind blows uphill.

d. The surface should be reasonably soft and preferably grass covered. Areas of concrete, gravel, or other hard standing should be avoided if possible.

e. If the area immediately surrounding the DZ is heavily timbered it will assist in acquisition by the aircrew, but will require a more accurate drop to avoid injuries.

10. Requirements for refuelling, tactical landing, rationing and the time for paratroops to commence parachute and equipment fits requires consideration.

11. The following flying requirements should be considered:

a. The aircraft run-in route should be clear of obstacles and major air corridors, and allow a flat and level approach at drop height for at least 3.2 kilometres.

b. A well defined DZ, or the proximity of obvious landmarks, will assist acquisition by the aircrew.

12. Weather is important to the safety of paratroops and their ability to continue the mission after a descent. Weather can also assist in providing security. The following should be considered:

a. prevailing winds in relation to DZ,

b. prevailing cloud conditions,

c. seasonal weather patterns,

d. daily weather patterns, and

e. effect on wind and weather of local geography and natural and man-made hazards.

13. The availability of additional health facilities, and their accessibility, must be considered in relation to the health support available at the DZ. Further detail can be found in chapter 16.

14. Effective command and control of the DZ and of the entire activity requires the following:

a. DZ safety officers must achieve visual control of the intended axis of the aircraft run-in and parachutists.

b. DZ markings must be in accordance with current doctrine, operations orders and pilot mission brief, so that the aircrew can clearly identify them.

c. DZ safety officers must have prearranged signals with the aircraft.

d. DZ vehicles must be positioned so as not to present hazards to paratroops while allowing immediate response if required.

WATER DROP ZONES

15. When selecting water DZ, the following factors should be considered:

a. size, shape and depth of body of water;

b. flying requirements;

c. safety craft requirements;

d. meteorological and tidal aspects;

e. command and control; and

f. hazards.

16. Water DZ are to be at least two metres deep. They are to conform to land DZ dimensions, although their length is usually dictated by the number of safety craft available. Flying requirements are as for land DZ.

17. Safety craft are required for all training water descents. Requirements are dealt with in detail in the *Manual of Army Training* and the *Manual of Occupational Health and Safety,* chapter 17. Tides often affect the depth of coast lines, large rivers and lakes well removed from the coast.

18. Command and control considerations are as for land DZ. If the DZ safety officer is ashore, communications with the safety officer afloat must be maintained.

19. The following hazards require consideration:

a. obstacles, both above and below the surface;

b. water temperature;

c. sea state;

d. currents;

e. other watercraft; and

f. power lines proximate to land-bound water DZ.

Fresh or Salt Water

20. Considerations for fresh water DZ are:

a. depth and underwater obstacles may not be recorded, and

b. still water can be extremely cold just below the surface.

21. Additional considerations for salt water DZ are:

a. depths and obstacles should be clearly defined on charts, and

b. stinging or biting marine life may be encountered.

FREE-FALL DROP ZONES

DROP ZONE SELECTION

1. The use of highly manoeuvrable parachutes for free-fall descents means that such DZ normally have a single point of impact, regardless of the stick size. Such DZ may generally be of smaller dimensions and by day meet less stringent surface requirements than static-line DZ, although the same basic considerations for selection and safety apply (see appendix 1). Free-fall DZ include those for ram air parachute static-line descents.

2. All factors listed in appendix 1 should be considered in the selection of free-fall DZ, as should the following:

a. day or night use,

b. method of identifying the release point and expected degree of accuracy,

c. availability of visual or electronic landmarks,

d. skill level and currency of dispatchers and navigators,

e. reliability of meteorological data used,

f. prevailing weather conditions,

g. skill level and currency of parachutists, and

h. proximity of alternative DZ.

3. Alternative DZ should always be selected. In operational descents, normally at night using minimal or no lights and with heavy loads, alternative DZ should be sited along a corridor astride the forecast wind line. The width of this corridor will depend upon the reliability of wind data used.

4. Free-fall DZ should normally be selected and controlled by DZ safety officers who are free-fall qualified.

MINIMUM DIMENSIONS

5. The dimensions stipulated at figure 1 are the minimum required to provide a reasonable area in which qualified paratroops, in good conditions, can land safely. Wherever possible, and whenever conditions are less than ideal, DZ should exceed these requirements. Requirements concerning general hazards and allowable distances from power lines and hazardous bodies of water are as shown in appendix 1.

6. By day, free-fall DZ are to have a minimum radius of 125 metres of clear ground. This area may contain isolated obstacles such as single trees or low fences. Surrounding this area there must be an additional buffer zone of 125 metres radius, which is to be at least 50 per cent clear of obstacles.

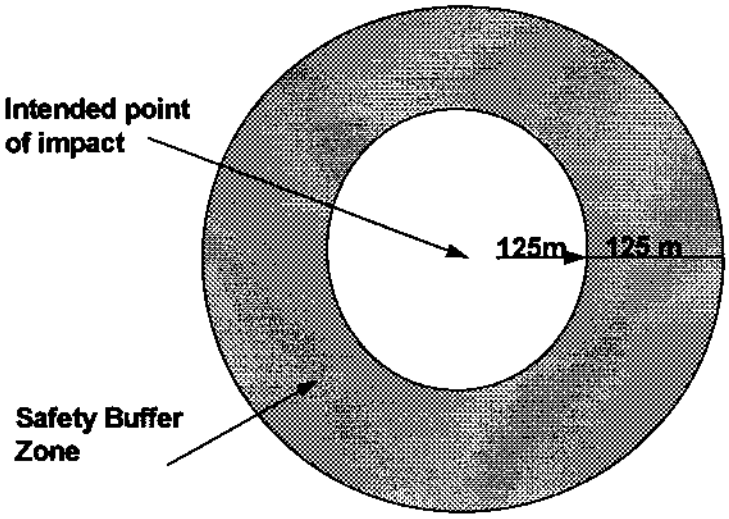

Figure 1 - Free-fall Drop Zone Minimum Dimensions

7. By night, free-fall DZ are to have a minimum radius of 125 metres of clear ground containing no obstacles. This area is to be surrounded by an additional buffer zone of 125 metres radius which may contain isolated obstacles.

8. At times there will be a requirement for free-fall paratroops and ground troops to use a free-fall stores bundle known as the aerial delivery system. This will be used in conjunction with personnel descents and in equipment or stores-only descents. The factors and considerations for the selection and control of an aerial delivery system DZ are similar to those for a free-fall DZ with the exceptions that the area is to be free of built-up areas and major roads and that a prohibited zone is established on the ground below the release point. This zone allows for malfunction of the aerial delivery system while under canopy and is to be kept clear of all personnel and equipment.

9. Aerial delivery system safety template dimensions are suitable for day and night operations and are designed to provide a reasonable degree of accuracy when using qualified aerial delivery system operators in good conditions. All dimensions are to conform to free-fall DZ dimensions with the addition of the prohibited zone of 500 metres radius on the ground immediately below the release point, as shown at figure 2.

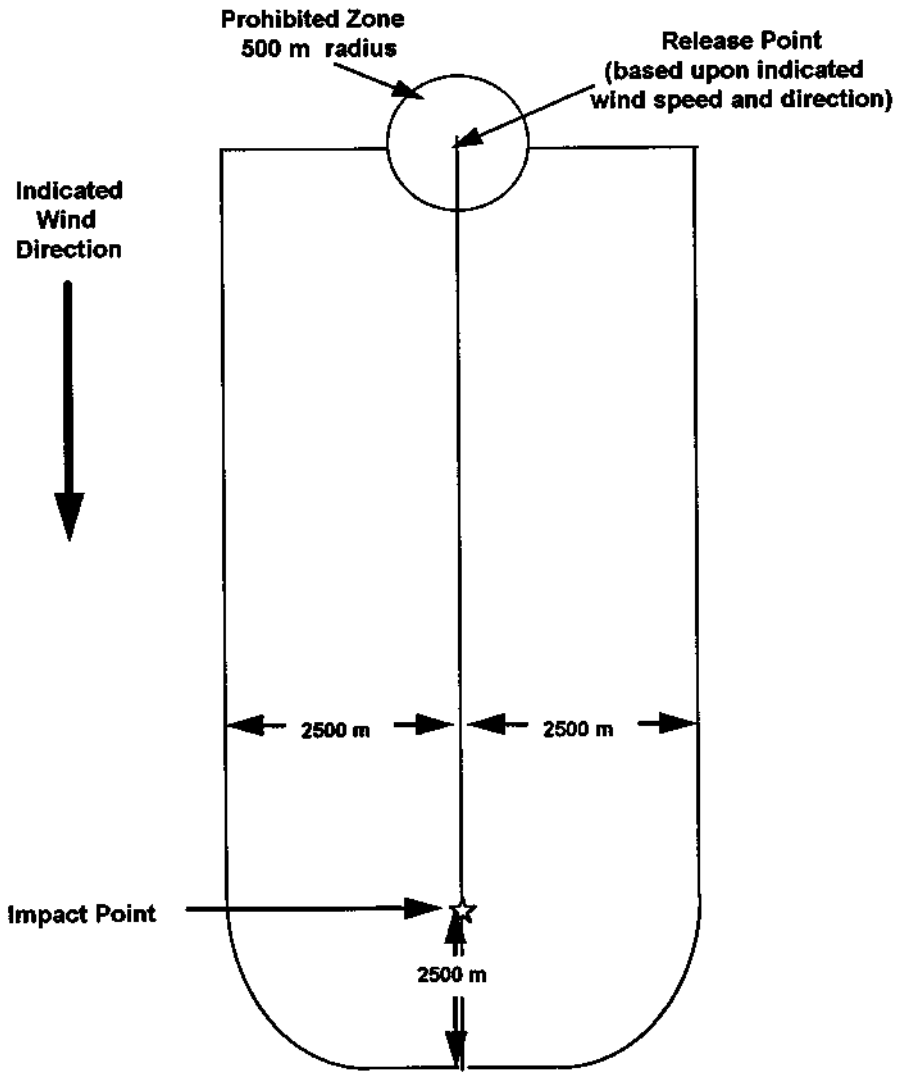

Figure 2 - Aerial Delivery System Minimum Dimensions Safety Template

DROP ZONE MARKINGS

10. The following markings are standard, but may be varied through operation orders or pilot mission briefs.

a. By day a code identifier (A, J, C, R or S) is to be positioned in the centre of the DZ at the intended point of impact, facing into the ground wind.

b. By night the centre of the DZ is to be marked by three continuous white lights in line along the ground 100 metres apart, with a flashing white light 100 metres left of the centre when facing into the wind.

	DZ	MARKINGS
1.	Operations - Day or night	Unmarked
2.	Training - Day	A code identifier on the point of impact facing into the ground wind.
3.	Training - Night	Lights spaced 100 m apart in centre of DZ. See figure 3.

Table 1 - Free-fall Drop Zone Markings

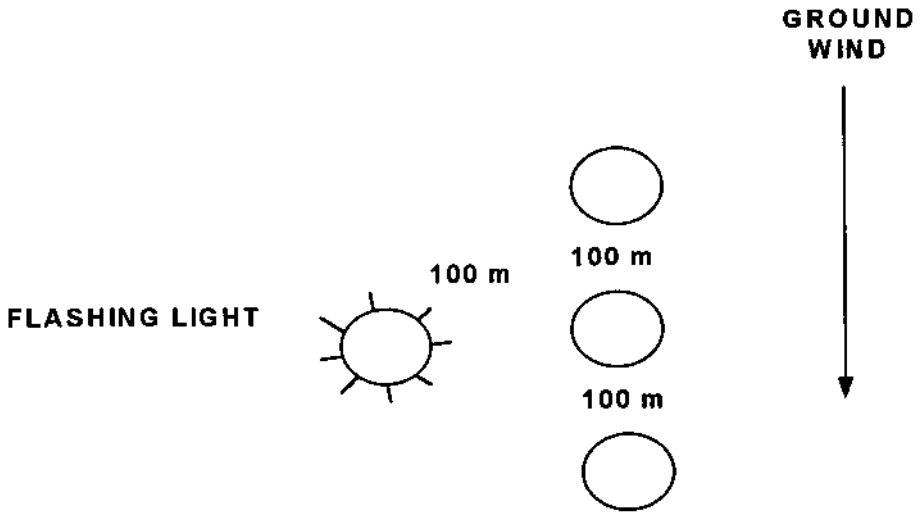

Figure 3 - Night Free-fall Drop Zone Markings

STATIC-LINE DROP ZONES

1. Whether on land or water, static-line DZ must conform to the same basic requirements in terms of size and marking. The major difference is found between the markings for calculated air release point and ground release system DZ. The following sections detail the minimum dimensions and standard markings for static-line DZ.

MINIMUM DIMENSIONS

2. The following are the minimum required dimensions for DZ and theoretically provide approximately 90 per cent probability of all troops landing within boundaries:

a. The minimum area required by one parachutist, from a single aircraft at 1000 feet above ground level, is 550 metres by 550 metres. Add 70 metres to the length for each additional parachutist when using simultaneous double-doors (125 knots indicated air speed), or 60 metres when using one door or ramp (115 knots indicated air speed) for continuous exits. Add 120 metres for each additional parachutist for controlled exits (two seconds between each parachutist).

b. For drop heights above 1000 feet above ground level add 30 metres to the width (15 metres each side) and 30 metres to the length (trail edge) for each additional 100 feet above ground level.

c. For visual formations, add 100 metres to the width (50 metres each side).

d. For drops using instrument release procedures (adverse weather aerial delivery system or station keeping equipment) add 370 metres to the width (185 metres each side).

3. The requirements regarding distances from power lines, water hazards and general hazards described at Annex A also apply.

4. A DZ for the delivery of stores using the wedge system, immediately preceding a personnel drop onto the same DZ, requires an additional 325 metres of total length. The overshoot area for the wedge load may be partially superimposed over the personnel undershoot area. The intended impact point of the wedge load is 250 metres from the DZ leading edge. The personnel drop normally commences five seconds after the wedge, which equates to approximately 350 metres along the DZ. The intended impact point of the first parachutist is therefore 350 metres past the wedge impact point (600 metres from the leading edge) (see figure 1).

5. To determine the stick size which can be dropped onto a given DZ:

a. determine the total length of the DZ and deduct 550 metres from that figure (over and undershoot),

b. divide the remaining length by 70 or 60 (single or double-door exits),

c. add one (for the first parachutist who lands at the start of the DZ) and round down to the nearest whole number, and

d. this figure is the longest stick size which the DZ can accept.

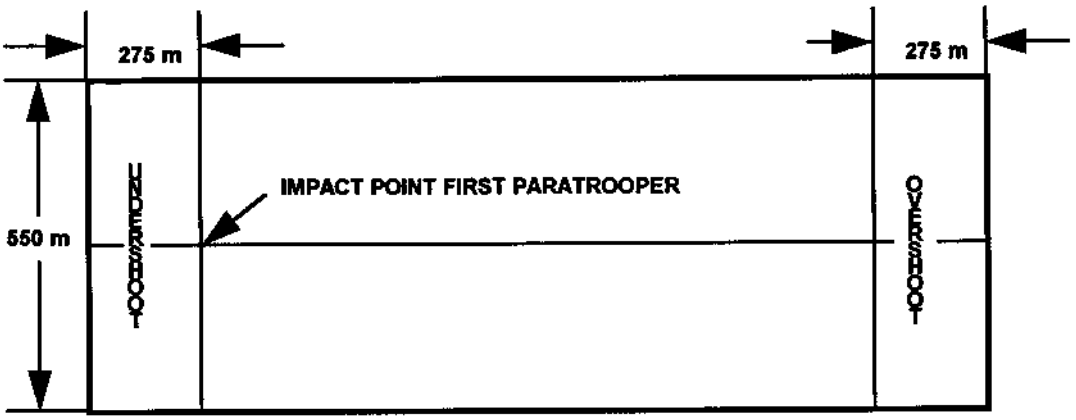

a. Personnel DZ

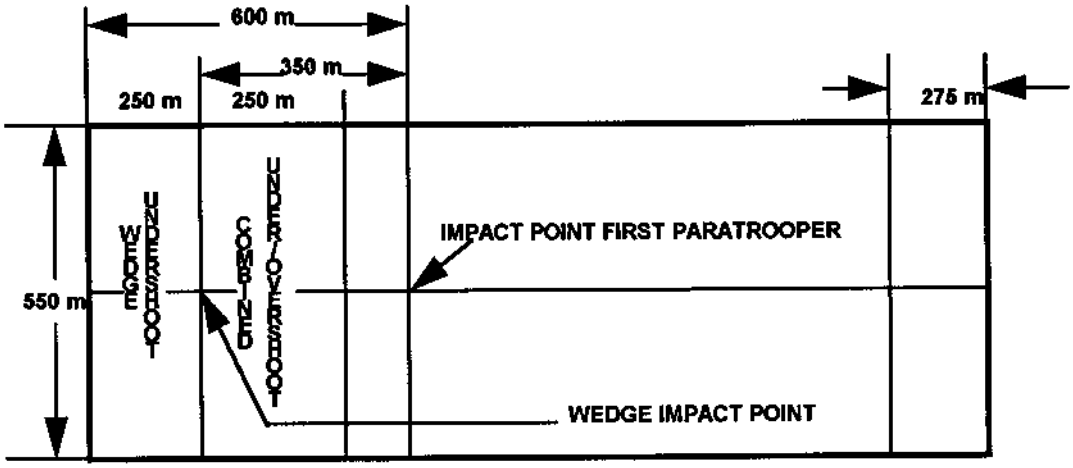

b. Wedge/ Personnel DZ

Figure 1 - Drop Zone Dimensions

MARKINGS

6. Static-line DZ may be conducted using either the calculated air release point or ground release system and may be sited on land or water. The markings used will vary between each type and by day and night. When dispatcher controlled release procedures are used, the DZ is marked as for a calculated air release point.

Land Drop Zone

7. The calculated air release point is determined by the aircraft navigator, with the aim of landing the first parachutist on the intended point of impact. Markings used are as follows:

a. When using standard markings the impact point is normally the only point which requires marking. By day this consists of a raised angle marker or code identifier which is to be aligned to the DZ axis. A code identifier, if used, is to designate A, C, J, R, or S, and is to be at least six by six metres. By night, three white lights are to be positioned along the axis astride the impact point, 200 metres apart, and with a flashing white light 200 metres left of centre.

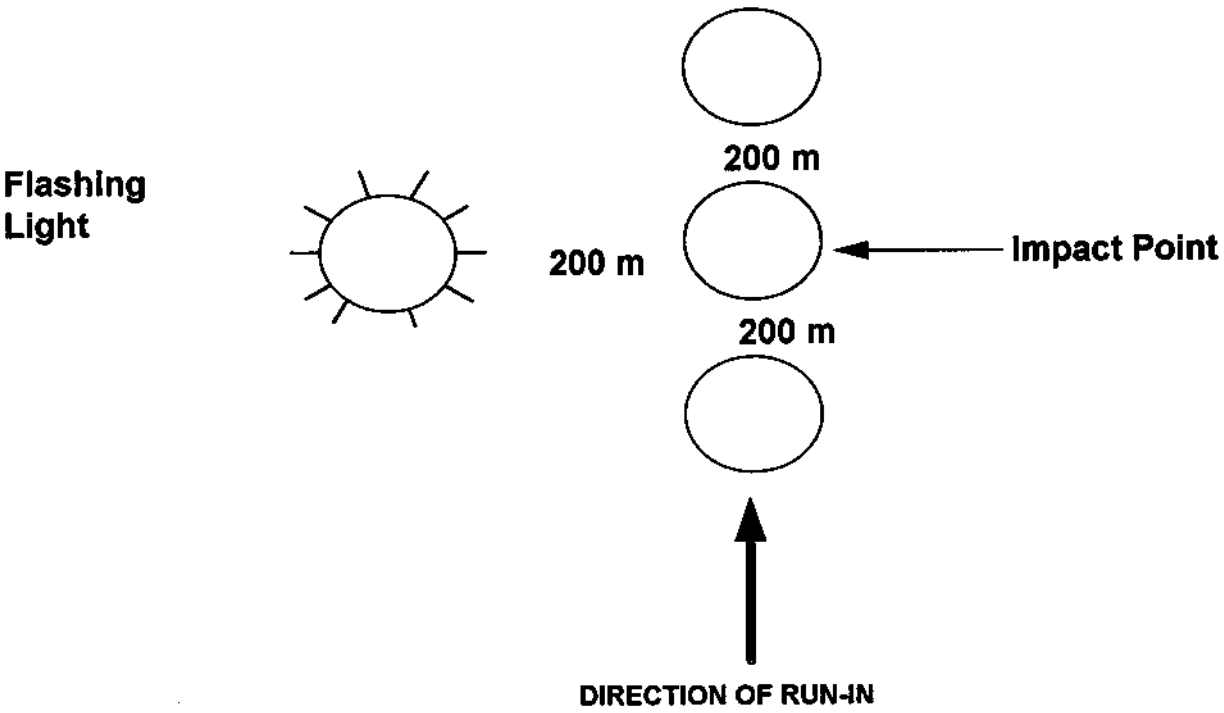

Figure 2 - Standard Calculated Air Release Point Night Markings

b. For special operations DZ by day, the impact point is to be marked with a raised angle marker or standard panel (2 x .75 metres). In addition, an acquisition marker, consisting of another standard panel or smoke (of a designated colour), may be used to aid in the acquisition and authentication of the DZ. It is to be positioned between 400 and 5000 metres short of the impact marker and on the same axis. By night, the impact point is to be marked with an infra-red strobe or electronic signal, and the acquisition marker with a suitable light or electronic signal. These details need to be included in operation orders and pilot mission briefs. Table 1 details special operations DZ markings.

c. Markings for wedge/personnel drops by day are as for subparagraph 7.b.

	SPECIAL OPERATIONS CREW SINGLE AIRCRAFT	SPECIAL OPERATIONS CREW MULTI AIRCRAFT	TACTICAL OPERATIONS CREW
Day	Nil markings.	Point of impact marker (may be a raised angle marker or a code identifier).	Point of impact marker (may be a raised angle marker or a code identifier).
Night	Nil markings or acquisition marker.	Point of impact marker (infra-red strobe or electronic signal).	Three white lights 200 m apart along DZ axis, centre light on point of impact. Flashing white light 200 m left of the centre light.

Table 1 - Marking of Special Operations Drop Zone

Note:

1. For wedge/personnel combined drops, only the wedge load point of impact is to be marked.

8. When using the ground release system the DZ safety officer is responsible for calculating and marking the release point to land the first parachutist on the intended impact point. Markings vary by day and night, with lights replacing panels by night (see figures 3 and 4). The following standard markings are used by day:

a. The impact point marker indicates the intended impact point of the first paratrooper and is to be marked with the code identifier.

b. The release point marker indicates the point over which the first parachutist is to exit the aircraft and is to be marked with an arrow (constructed of standard panels) or a raised angle marker. It is to be parallel to the DZ axis.

c. The left marker is a standard panel positioned at least 300 metres directly left of and parallel to the release marker, to assist the pilot in positioning the aircraft. If terrain or vegetation preclude use of a left marker, then a right marker, which must be detailed in operation orders or pilot mission briefs, may be used.

d. The stop drop marker (optional) is a standard panel, and denotes the position at which the last parachutist can leave the aircraft and still land on the DZ. It is positioned parallel to the DZ axis, in line with the left marker.

e. The run-in marker (optional) is a standard panel and assists the aircrew to align the aircraft to the release point marker. It is to be positioned 400 metres short of, and in-line with, the release point marker.

f. The run-out marker (optional) is a standard panel and assists the aircrew to maintain the aircraft on the run-in axis. It is to be positioned parallel to the stop drop marker on the run-in axis.

9. At night, three white lights are to be positioned parallel to the axis and astride the release point, 200 metres apart, with a flashing white light 200 metres left of the release point.

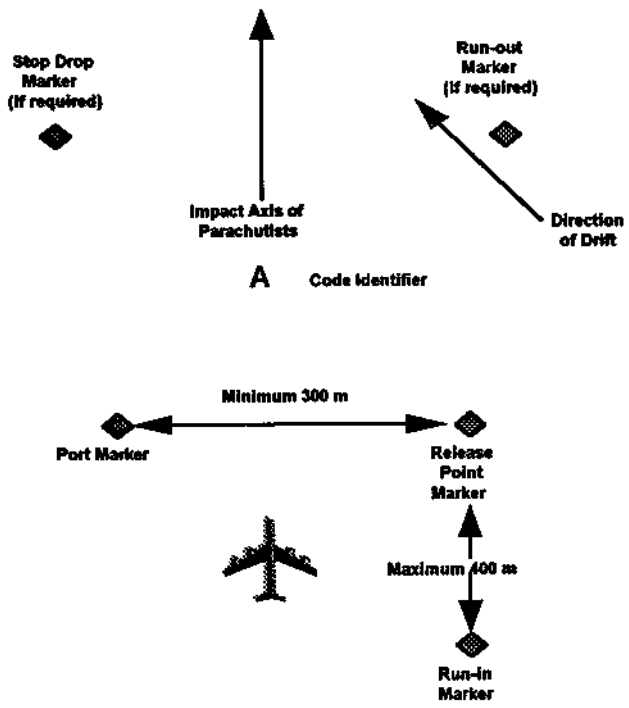

Figure 3 - Day Ground Release System Markings

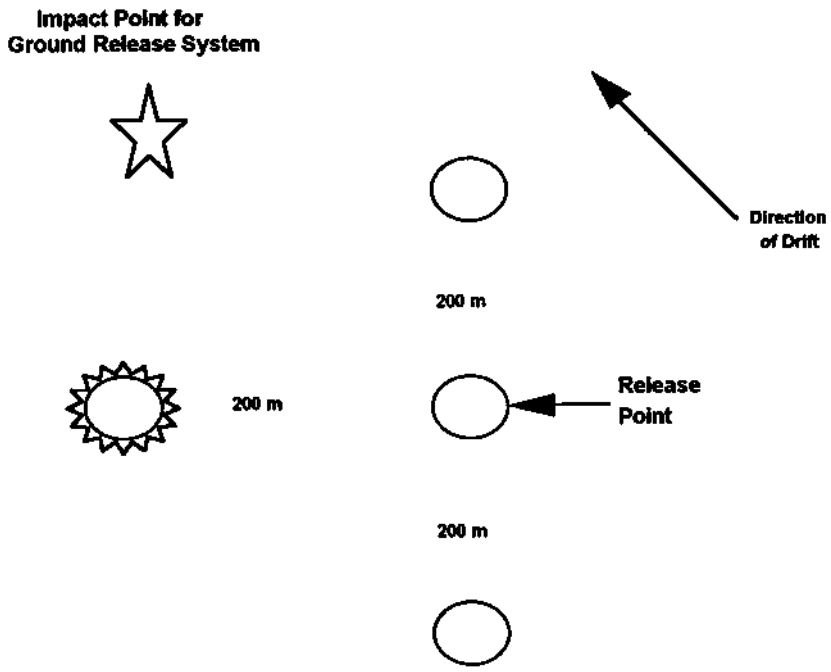

Figure 4 - Night Ground Release System Markings

Water Drop Zones

10. Water DZ may use either the calculated air release point or ground release system, and require essentially the same markings as land DZ. The obvious limitation is that panels or lights normally have to be positioned on boats, unless a land mass is conveniently located in the required area.

11. The most important marker for a ground release system water DZ is the release point marker, which will normally be positioned on a boat. In order to reduce the number of markers and boats required, the release point marker is normally positioned 200 metres to the left of the release point. Other markers are optional. Details concerning run-in details, length of DZ and other relevant information must be covered in an operation order or pilot mission brief.

12. For a calculated air release point water DZ, only the impact point marker is required. It is to be positioned 200 metres to the left of the intended impact point of the first paratrooper.

MASS DROPS

13. A mass drop is one in which more than one aircraft drop personnel onto the same DZ in the same pass. They involve the drop of large numbers of personnel and equipment onto the DZ which often contain a number of hazards. For planning purposes additional DZ safety officers, commensurate with the scale of the operation, and a DZ rigger should be appointed. Additional support, particularly health support and recovery equipment, should also be considered.

14. The large number of personnel required to be in communication with the DZ safety officer may require the establishment of multiple nets. Non-tactical hand held radios are ideal for the majority of situations and do not result in cluttering of the critical ground or air nets. Operational drops will be conducted using normal unit nets.

15. Within 30 minutes prior to the conduct of a mass drop, the DZ safety officer is required to conduct wind assessment of mean winds from drop height to the ground using either a drift indicator (streamer) dropped from an aircraft, or a meteorological balloon released from the DZ.

16. The DZ should be cleared in detail by teams which include appropriate health support.

CONTAINER DELIVERY SYSTEM AND HEAVY DROP

1. Technical and physical characteristics are covered at paragraphs 5-21 of appendix 1. Specific criteria are at table 1.

Category		Altitude (Above Ground Level)	Width [1][3]	Length [3]	
Compacts/Maxi-box Army Fixed-wing C130/DHC4		To 350 ft	130 m	130 m. Add 30 m for each additional load	
				No. of Containers	
CDS [2]	**DHC4** [5]	600 ft	300 m	1	300 m
				2	350 m
				3	400 m
				No. of Containers	
CDS [2]	**C130** [5]	To 600 ft	300 m	**Single** / **Double**	**Length**
				1 / 1-4	450 m
				2 / -	450 m
				3 / 5-6	500 m
				4 / 7-8	550 m
				5 / 9-10	600 m
				6 / 11-12	650 m
				7 / 13-14	700 m
				8 / 15-16	750 m
				9 / 17-18	800 m
		Above 600 ft	300 m + 40 m for each 100 ft above 600 ft (20 m to each side)	Add 40 m to the trailing edge for each 100 ft above 600 ft	
CEP [6]	**DHC4**	1000 ft	400 m	400 m	
Heavy Equipment		To 1100 ft	400 m	**1 Platform** 400 m	**Additional** Add 300 m to DZ at trailing edge for each additional platform
		Above 1100 ft	400 m +26 m for each 100 ft above 1100 ft (13 m to each side)	400 m plus 26 m for each 100 ft above 1100 ft (13 m to leading and trailing edge of DZ)	
Wedge As Cargo		To 600 ft	300 m	400 m[7]	
With Pers[4]		To 1000 ft	550 m	500[8]	

Table 1 - Drop Zone Criteria

Notes:

1. Visual formation - increase width by 100 metres (50 metres each side).
2. Altitudes above 1000 ft above ground level are not recommended.
3. Army uses metric system for linear measurements while RAAF airdrop navigational equipment is designed and calibrated in the imperial system.
4. The wedge overshoot area may be superimposed over the personnel undershoot area.
5. Container delivery system - A22 canvas container weight range 501-2200 lb.
6. Combat expendable platform - constructed from timber and designed to secure load item to platform for airdrop.
7. Point of impact is 1/3 from leading edge.
8. Point of impact at centre of wedge DZ area (250 m).

Visual Markings and Signalling Devices

2. Ground-to-air recognition panels (normally 1 x 2 metres) are available for issue as a standard in-service item. Substitutes such as canvas strips or sturdy cloth material may be used to prepare ready to use code identifier letters and field expedient raised angle markers. Standard panels are provided in orange/yellow or red/pink luminous colours to contrast with the surrounding terrain and assist in DZ acquisition.

3. During darkness, DZ are to be marked by lights. Aircraft landing lights or right angled torches are normally used but any substitute is acceptable in an emergency. Strobe lights should only be used for specific applications. The lights should not be so bright as to attract the attention of the enemy and should be easy to extinguish or conceal. If possible, they should only be visible from the direction of approach of the transport aircraft.

4. Smoke, pyrotechnics or flares may be used to enhance acquisition of the DZ and in the case of smoke to indicate wind direction. Smoke should be so located that the DZ markings are not obscured from the aircrew.

5. Other signalling devices such as tethered balloons, heliograph mirrors and radio/electronic devices may be used. Techniques for the use of such items are to be detailed in operation orders or other instructions.

Cargo Drop Zone Markings and Identification Aids

6. The following are descriptions of mandatory and additional markings for use during day or night airdrop operations:

a. Mandatory markings are:

(1) Code identifier letters A, C, J, R, and S. Lights are substituted for panel markers at night. The minimal acceptable size of letters as symbols for DZ markings is seven metres x seven metres with a desirable size of 12 metres x 12 metres. The code identifier is placed on the intended point of impact with the base of the letter nearest the approach end of the DZ and in line with the axis. The point of impact is always located on the axis of the DZ one third of the distance from the leading edge of the DZ unless otherwise briefed (see figure 1).

(2) Raised angle markers must be placed by day at the apex of the code identifier to assist in early acquisition of the DZ. This applies to calculated air release point and ground release system techniques. The raised angle marker is an open pyramid marker with a centre pole support 1.8 metres tall (see figure 1).

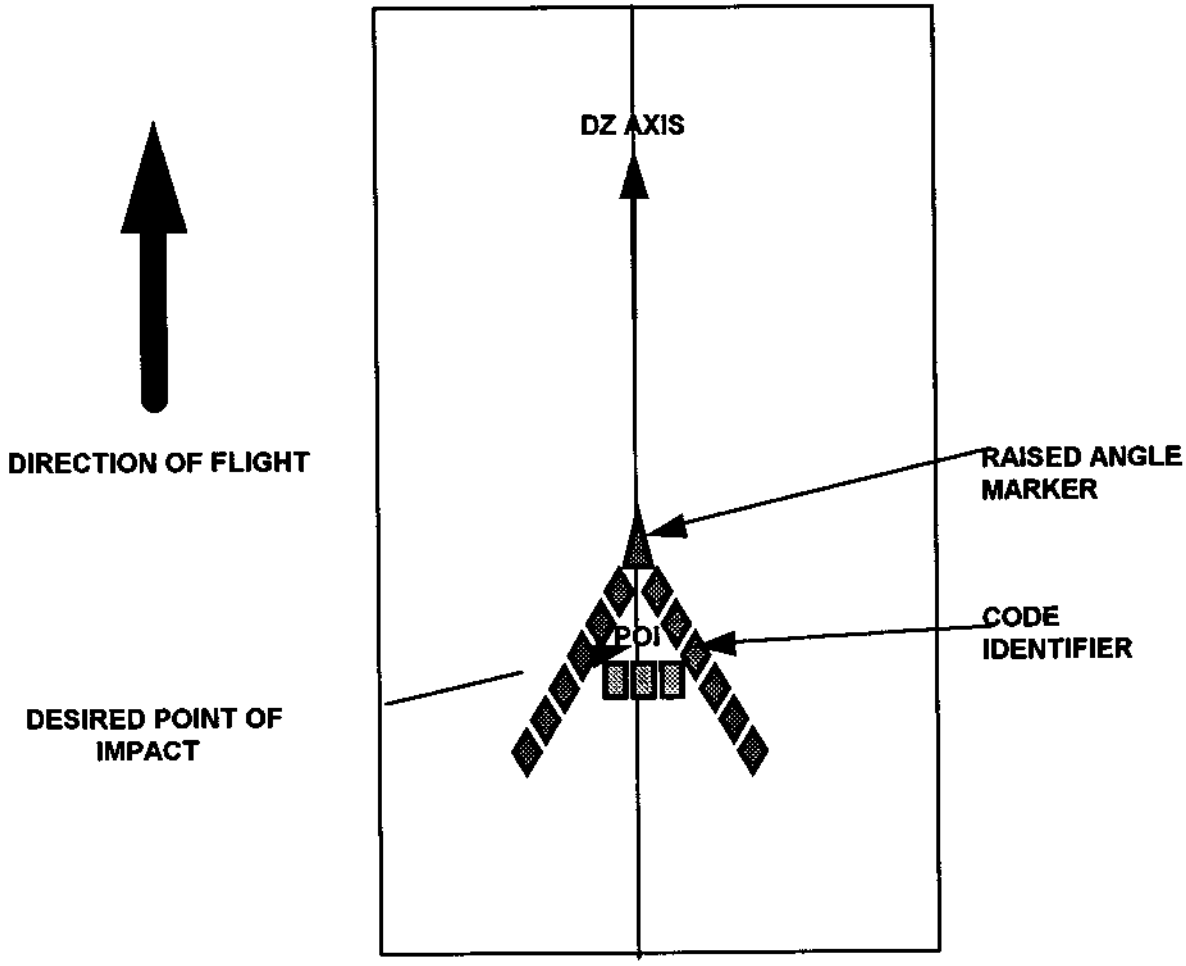

Figure 1 - Cargo Drop Markings (Diagrammatic)

(3) When multiple DZ or multiple points of impact are used in an operation, each should be marked with a different code identifier letter. Identification may be further defined by the addition of horizontal bars placed to the right of the code identifier. Up to four bars may be used (see figure 2).

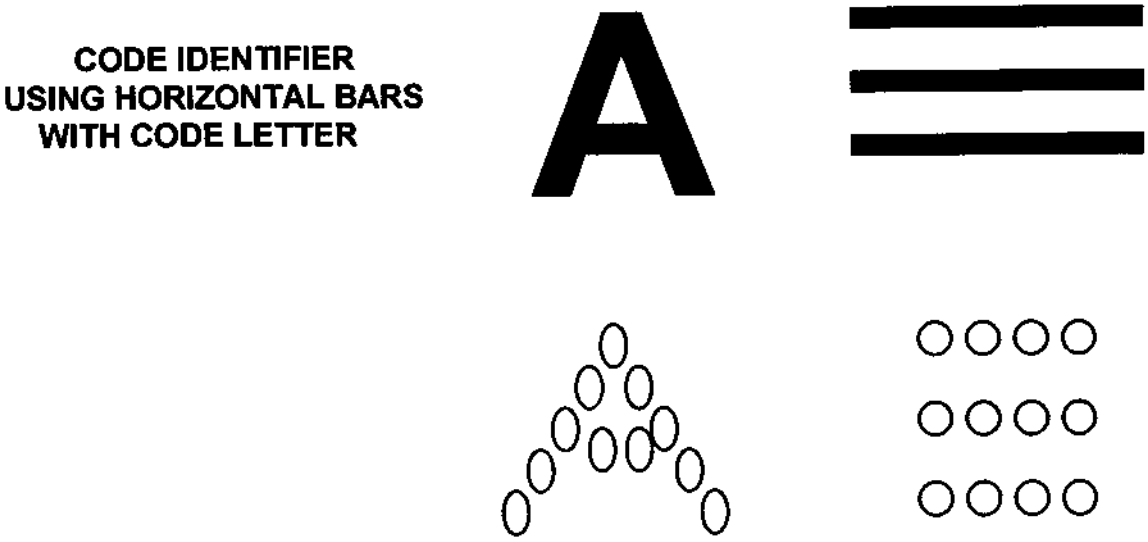

Figure 2 - Multiple Drop Zone Markings

(4) Temporary postponement of airdrops is indicated by a parallel bar symbol placed at the base of the code identifier in line with the DZ axis. Markers or lights as appropriate are to form the signal, which should be of the same size as the identifier (see figure 3).

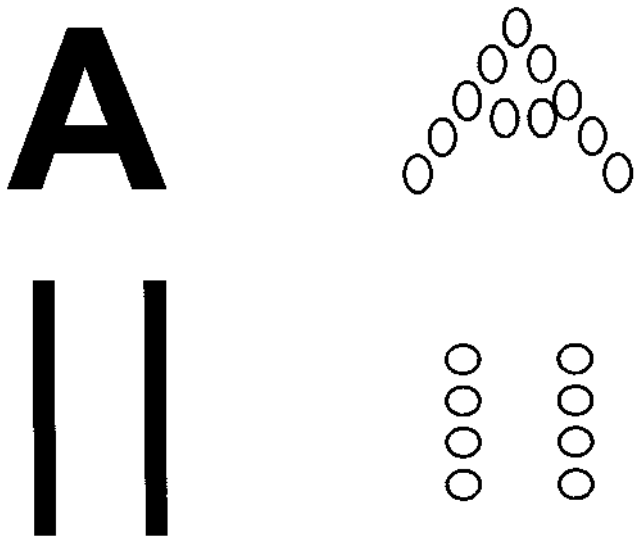

Figure 3 - Temporary Drop Zone Closure

(5) Cancellation of the airdrop or closing of the DZ is indicated by placing an `X´ symbol at the base of the identifier. Markers or lights as appropriate are to form the signal, which should be the same size as the identifier. Cancellation may also be indicated by red smoke, flares or lights or panel markers withdrawn (see figure 4).

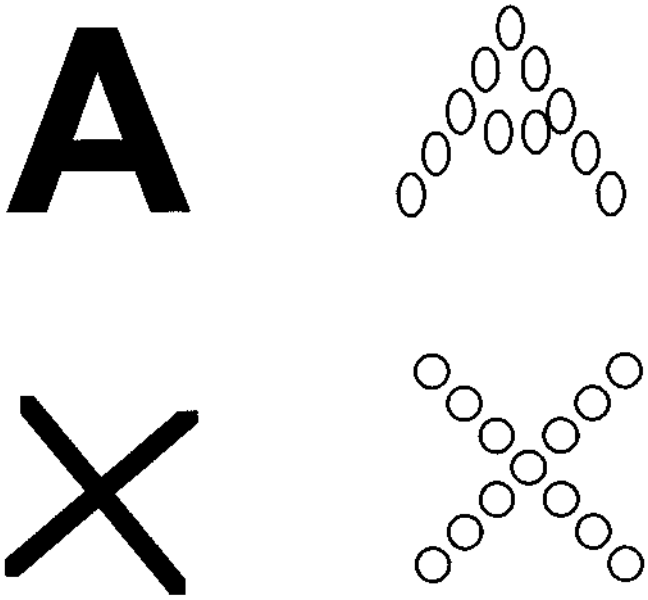

Figure 4 - Airdrop Cancellation

b. To enhance accuracy, the following additional markings may be installed on the DZ:

(1) Side markers are single vertical markers or three panels laid to form a solid square two metres x two metres. By day they should be placed 230 metres on each side of the code identifier at 90 degrees to the DZ axis. At night a single light should replace the vertical marker and panels. This concept applies to both calculated air release point and ground release system techniques.

(2) Timing points identify a point of known distance from the intended point of impact at which the aircrew commences a time count to the calculated air release point. During day operations the timing point will be selected from prominent terrain or topographical features. Artificial timing points may be used when natural ones are not available. At night, each timing marker point may consist of a green flashing or rotating beacon and a white stationary vertical beam light clearly visible at drop altitude from a distance of three miles.

(3) When using the ground release system, the arrow symbol may be used to mark the point on the ground over which the aircrew should release the cargo load so as to strike the intended point of impact. Positioning of the grid release point is determined by the DZ marking detachment or control team by computation of the anticipated trajectory of the parachute supported equipment. The arrow symbol should be constructed so that the tail is twice the length of either arm, with each arm forming a 45 degree angle with the tail.

(4) Smoke, other than red, may be used as a visual indication of wind direction and speed. It should be located adjacent to the code identifier so that the smoke does not obscure any DZ markings from the aircrew. Colour selection and operating techniques are to be included in other operating instructions.

(5) Colour indicators in the form of smoke, pyrotechnics or lights may be used to indicate a DZ condition or to pass late changes in that condition prior to the adjustment of ground markers or light markings. Their availability and use must be specified in appropriate operation orders or other instructions. The use of red smoke, red flares or red lights indicates conditions unsuitable for an airdrop.

(6) Limit markers are markers or lights used to mark the corners and outline the perimeter of the DZ when security of the area permits. The trailing edge or departure end of the DZ may be marked at night with an amber rotating or flashing beacon. These markers may be collocated with a vertical stationary light beam placed on the DZ axis.

c. Where the nature of the terrain, area of operations and airdrop system used preclude the layout and marking of DZ as prescribed above, the devices used and methods of marking are to be decided between the commanders of the air transport force and ground force. The use of such layouts and markings is to be provided for in the operation order or other instructions.

d. Visual markings may be augmented by radio communications when communications security permits.

7. In many circumstances it is not practical to provide complete DZ night markings. In those circumstances the following tactical DZ markings are to be used:

a. Four-light DZ markings (see figure 5) may be used. The lights may be lamps, torches, strobes, flares made from tins filled with sand and petrol, or any other suitable device. To assist DZ identification, all lights may be coloured (eg with lamp filters) and the port side marker may be keyed to provide a morse DZ identification. Strobe lights should only be used as port side markers.

b. A stop drop condition is to be indicated by extinguishing the port side marker or by illumination of a red flare. All light colours, DZ morse identification (if provided) and any changes are to be included in the DZ briefing.

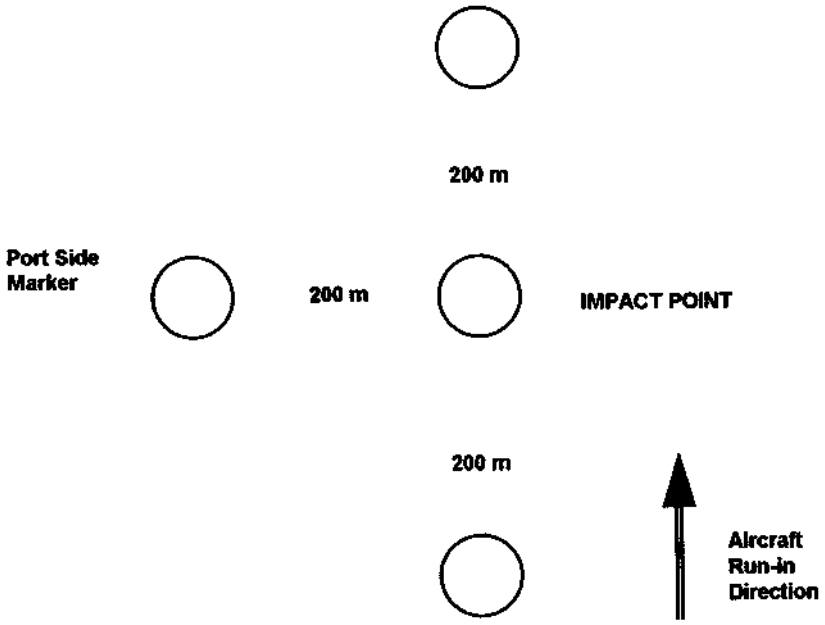

Figure 5 - Tactical Night Drop Zone Markings

8. The wind restrictions applicable to airdrop loads are at table 2 and are the maximum allowed:

	At Drop Altitude	SURFACE WINDS (knots)				
		Maxi-box	Compacts	A22	CEP	Platform
Army Fixed-wing	13	13	13 (1)	-	-	-
DHC4	40	13	13 (1)	13 (1)	17	-
C130	40	13	13 (1)	13 (1)	-	17

Note:

1. Items rigged with a parachute release assembly may be airdropped with surface winds up to 17 knots.

Table 2 - Cargo Drop Zone Wind Restrictions

9. In combat conditions any area may be used as a DZ or extraction zone. If the available DZ is small, the GC must accept the possibility of the loss of a percentage of the airdrop supplies.

LOW ALTITUDE PARACHUTE EXTRACTION ZONES

1. The low altitude parachute extraction system involves the delivery of a platform load, of supplies or equipment, from an aircraft flying in close proximity to the ground onto an extraction zone by means of an extraction parachute. The extraction process is activated as the aircraft approaches the extraction zone. Once deployed, the extraction parachute allows the load to separate from the aircraft and assists in slowing the load following impact with the ground.

2. The following wind restrictions apply to extraction zones and are the maximum allowed:

a. Cross Wind - 12 knots.

b. Tail Wind - 10 knots.

Extraction Zone Layout

3. The physical characteristics of an extraction zone are similar to those applying to cargo DZ. As the aircraft adopts a landing attitude on approach, particular attention must be paid to aircraft approach and exit corridors and the clear apron areas on either end of the extraction zone.

4. Although day and night extraction zones vary in size, both layouts are the same and comprise the following:

a. The approach corridor is an area free from overheight obstructions to allow the aircrew sufficient time to acquire the extraction zone and adopt a safe glide path. The approach corridor extends forward of the extraction zone threshold and is measured as an angle to the horizon, commonly referred to as an obstruction free angle, and laterally to the ground across the width of the extraction zone.

b. The approach zone, which commences at the threshold of the extraction zone, must conform to the same lateral safety angles as the approach corridor. The approach zone is cleared of all obstacles to ground level.

c. The designated impact and slide area for the low altitude parachute extraction system platform is called the impact zone. Impact zones for both day and night operations must be a minimum of 300 metres long and 24 metres wide and be cleared to ground level. They must also be free of any bumps or ruts which might cause the platform to tumble on impact.

d. Clear areas 15 metres wide are to be sited either side of the impact area and are to be cleared to ground level.

e. Lateral safety zones are not mandatory but extraction zones should be sited on the selected terrain so as to provide additional lateral clearance where possible. This is particularly important at night.

f. The climb-out zone and corridor are located at the departure end of the impact zone. The climb-out zone is cleared to ground level and is intended for the completion of the extraction run. The climb-out apron is the climb-out path with a very shallow climb gradient intended to allow for emergencies such as load malfunctions and engine failure during the drop.

Calculation of Distances and Angles

5. The correct measure of distances and angles for the siting of a low altitude parachute extraction system extraction zone is important to the success of the mission and the safety of the aircraft and crew. Sophisticated measuring devices will not always be available to soldiers tasked to lay out the extraction zone.

6. While distances can be paced out or measured on a vehicle odometer, the measurement of small angles may initially present some difficulty. Calculating `slope´, eg 1:25 or 1:40, given the accompanying extraction zone layout diagrams against fixed dimensions (see figure 1) is probably the easiest method.

7. Where terrain selected for the extraction zone does not conform to all of the laid down criteria every attempt is to be made to advise the flying squadron in advance of the mission.

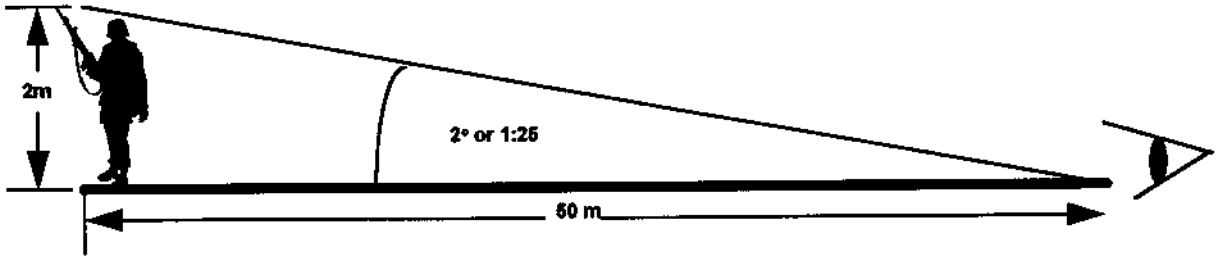

Figure 1 - Guide to Measuring Obstruction Free Angles

8. The layout and marking of low altitude parachute extraction system extraction zone by day and by night are shown at figures 2 to 5.

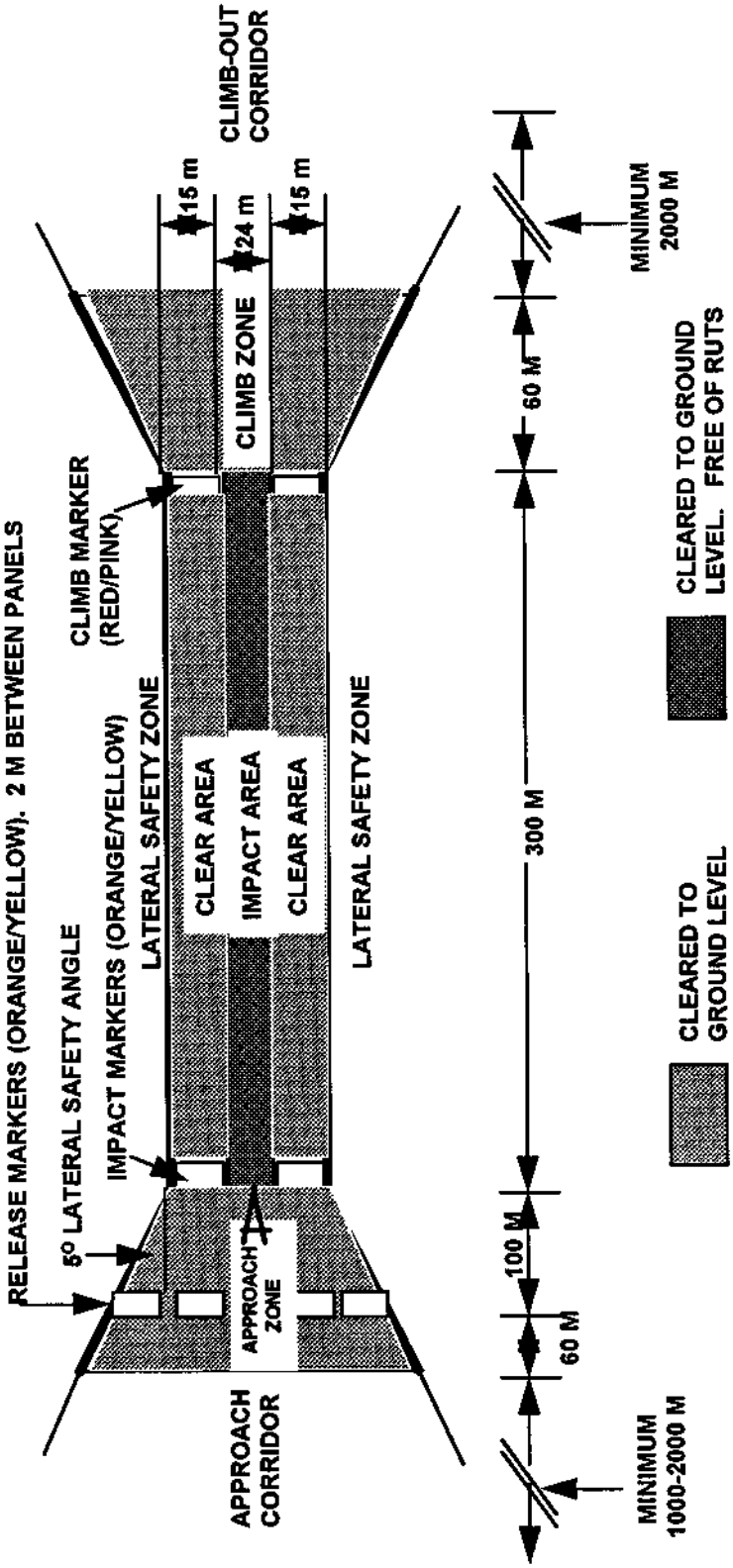

Notes:
1. The impact and clear areas are to be cleared of all obstructions to ground level. Grass is permissible in designated clear areas but must not exceed one metre in height. Ensure EZ markers are not obscured from view and that there is no associated fire risk.
2. Lateral safety zones are not mandatory but EZ should be sited centrally along the selected terrain so as to provide the maximum lateral clearance possible.
3. Approach and climb-zones extend outward from the extremity of the clear areas at an angle of 5° to the axis of the EZ. This lateral safety angle extends into approach and climb-out corridors, relative to the horizon and not the ground. Its upward slope is measured as an obstruction free angle (see figure 3).

Figure 2 - Low Altitude Parachute Extraction System Extraction Zone - Day Layout and Marking

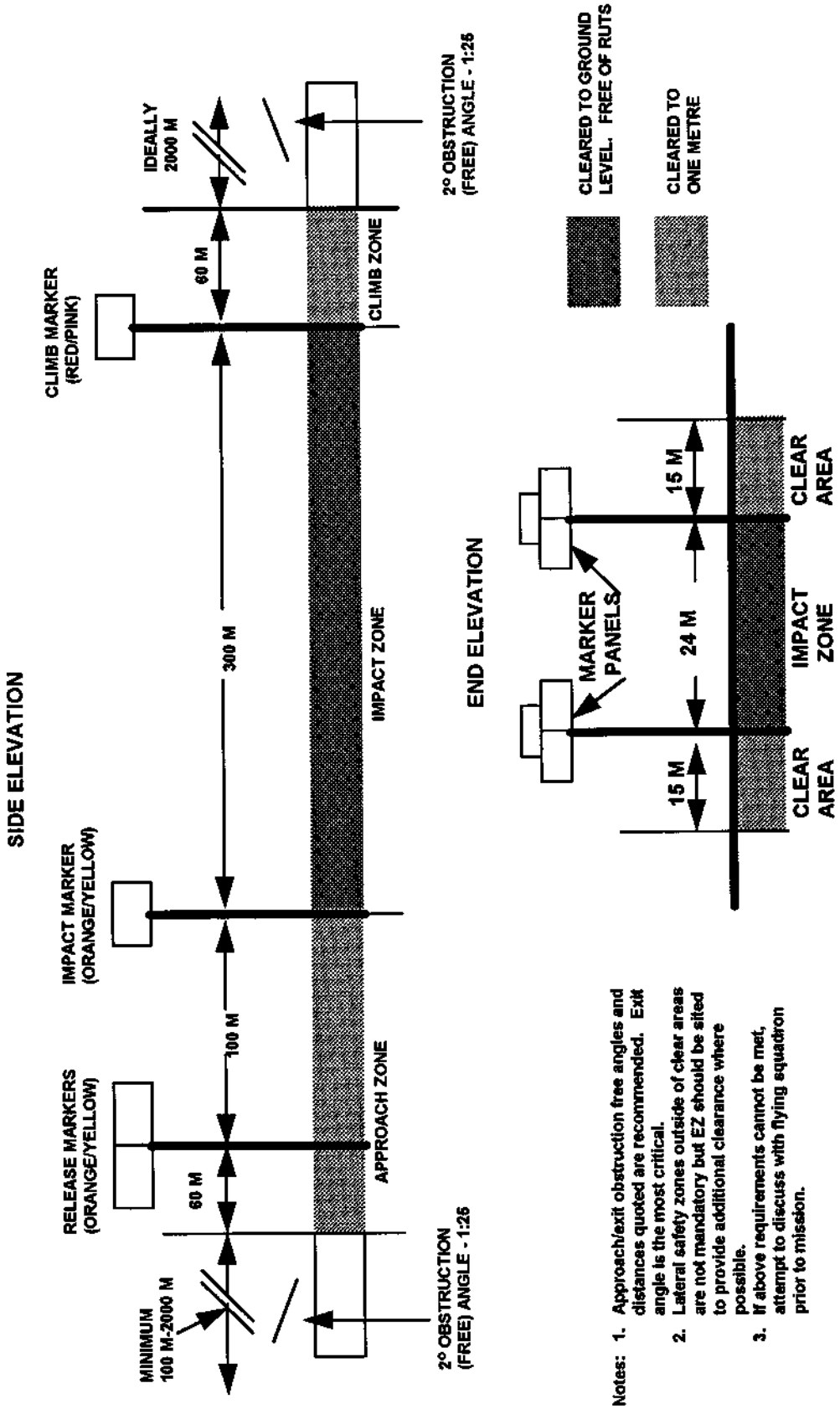

Notes:
1. Approach/exit obstruction free angles and distances quoted are recommended. Exit angle is the most critical.
2. Lateral safety zones outside of clear areas are not mandatory but EZ should be sited to provide additional clearance where possible.
3. If above requirements cannot be met, attempt to discuss with flying squadron prior to mission.

Figure 3 - Low Altitude Parachute Extraction System Extraction Zone - Day Elevation Diagrams

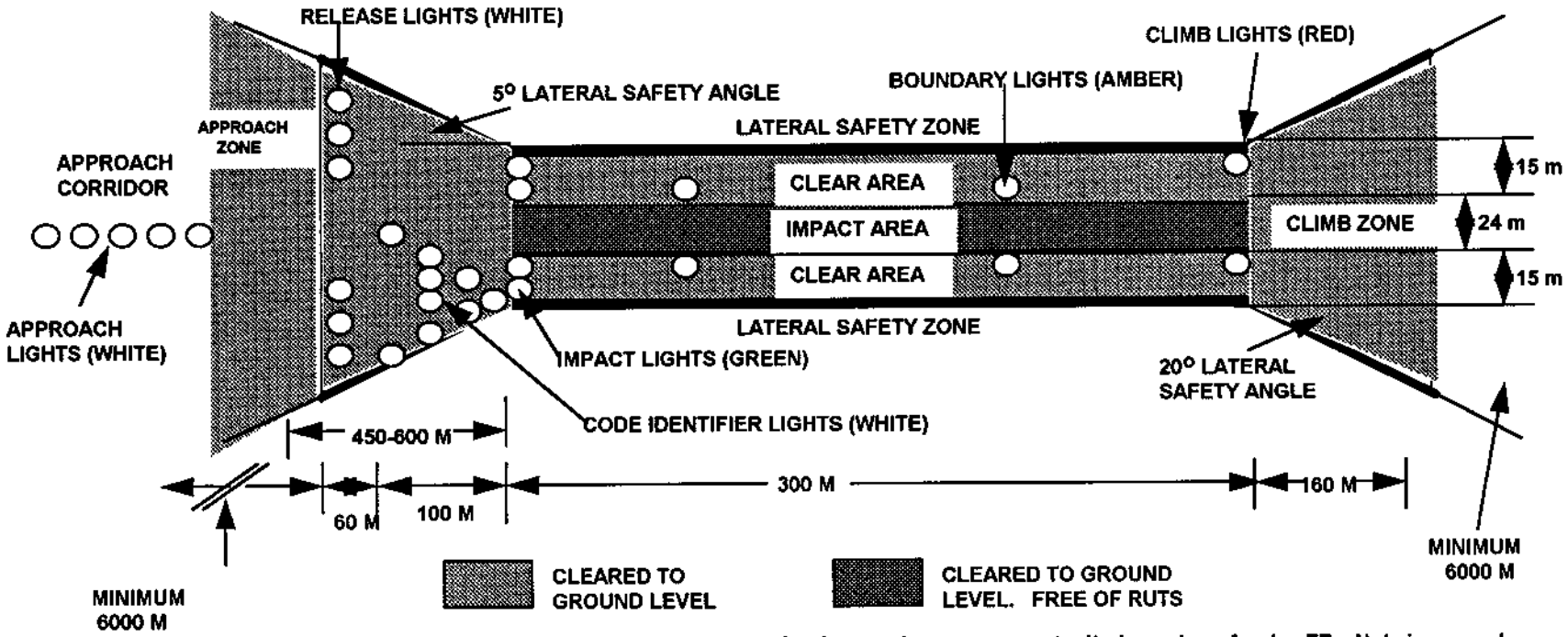

Notes:
1. The same lateral safety zone, lateral safety angle and obstruction free angle measurement criteria apply as for day EZ. Note increased (20 °) lateral safety angle in climb zone and the longitudinal dimensions.
2. Approach Lights. Five white lights sited approximately 450-600 m forward of impact area on EZ centre line.
3. Release Lights. Six white lights, three on each side of the centre line. Inside lights are spaced 24 m apart with lights on each side a minimum of 2 m apart.
4. Code Identifier. Minimum of nine white lights, sited in approach zone forward of the impact marker so as to afford maximum visibility to the aircrew.
5. Impact Lights. Four green lights, two on each side of the centre line, sited 100 m beyond the release lights. Spacing between lights is as per release lights.
6. Boundary Lights. Single amber (optional) lights sited at 100 m intervals either side of the impact area.
7. Climb Lights. Four red lights, two on each side of the centre line at trailing edge of impact area.

Figure 4 - Low Altitude Parachute Extraction System Extraction Zone - Night Layout and Marking

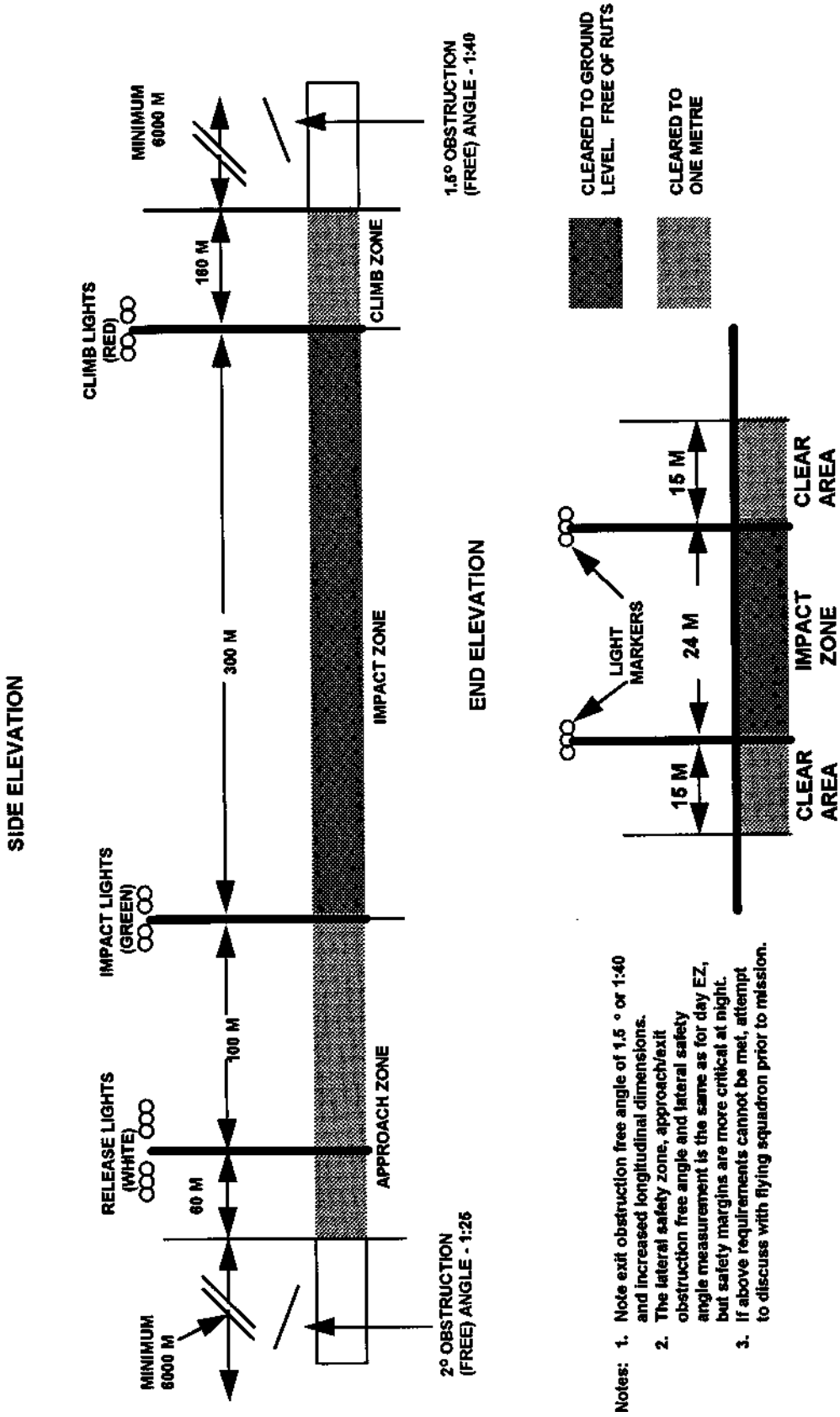

Notes:
1. Note exit obstruction free angle of 1.5 ° or 1:40 and increased longitudinal dimensions.
2. The lateral safety zone, approach/exit obstruction free angle and lateral safety angle measurement is the same as for day EZ, but safety margins are more critical at night.
3. If above requirements cannot be met, attempt to discuss with flying squadron prior to mission.

Figure 5 - Low Altitude Parachute Extraction System Extraction Zone - Night Elevation Diagrams

SPECIAL FORCES PARACHUTE OPERATIONS

1. The following considerations are provided for planning purposes only. Detailed planning will be undertaken by the designated special forces headquarters. Each of the described techniques require considerable training and rehearsal.

2. Beach parallel is a technique which uses a beach for insertion of pathfinders or a small raiding party when no suitable land DZ is available. Considerations are:

a. size of the surf zone and size of the sea swell;

b. beach landing area;

c. equipment and training of paratroops; and

d. means of identifying the DZ, ie visual or electronic.

Specialist training and equipment is used. Personnel must be trained and equipped as water operators, with a sufficient standard of swimming and surf negotiation.

3. Parachute load follow is a special forces technique developed for the clandestine insertion of small teams. This technique requires considerable preparation of equipment and support from air dispatch personnel. Personnel need to be specifically trained and practised in this technique. Location of the DZ is determined by the threat and the range of the small craft.

4. Ships rendezvous is a specialist technique for marrying-up small special forces patrols with either surface vessels or submarines. Before the conduct of such operations, close liaison and coordination must be established between the vessel commander/aircraft captain/patrol commander. Some considerations are:

a. means of marrying-up,

b. lighting,

c. communications, and

d. radar.

5. High altitude high opening is a term used when paratroops exit an aircraft at heights in excess of 10 000 feet above mean sea level and the main parachute is either activated by means of a static-line or manually by the individual within 10 seconds of exiting the aircraft. At exit heights in excess of 10 000 feet above mean sea level supplementary oxygen or personal oxygen breathing systems are required.

6. High altitude low opening is a term used when paratroops exit an aircraft at heights in excess of 10 000 feet above mean sea level and the main parachute is either activated by mechanical or manual means following a predetermined delay in free fall of at least 10 seconds after exiting the aircraft.

c. GC's and AEC's tactical plans;

d. force size and composition, including equipment levels and states of readiness;

e. timings;

f. duration of operations;

g. aircraft allocation and loading characteristics;

h. quantity and type of supplies and equipment required in each administrative phase;

i. availability of air dispatch equipment and mechanical handling equipment;

j. desired rate of build-up of the ground force at landing areas, including tactical cross-loading of aircraft;

k. plans for link-up with other airborne or ground forces;

l. location of mounting bases;

m. casualty holding;

n. policy for disposal of bodies;

o. policy on handling of prisoners of war and refugees;

p. repair and recovery policy;

q. civil affairs requirements;

r. reserves in manpower, equipment and supplies;

s. anticipated loss rate of personnel, equipment and aircraft;

t. single Service responsibilities for administrative support; and

u. maintenance or improvement of landing areas for subsequent operations.

1108. Responsibility for the provision of administrative support will normally be specified in the initiating directive. Supporting plans should be developed in parallel between all agencies concerned. Collection and compilation of administrative planning data should commence as early as possible, and the preparation of plans and orders undertaken by operations and logistics staff in concert.

1109. The GC should be given the authority and capability to phase the conduct of logistics support operations, adjust priorities of delivery and determine the most practical location to which supplies are to be delivered. Where possible, stocks should be positioned well forward in order to minimise aircraft fuel use and reduce turn around time.

1110. The importance of conserving the available aircraft lift capability, particularly with airmobile operations, should be appreciated by commanders at all levels. Initial operations will normally be executed and maintained on austere scales, with only essential equipment, supplies and personnel being moved into the objective areas.

Mounting Phase

1111. Tactical and support planning occurs during this phase once sufficient assets to mount the operation are allocated. Forces, equipment and supplies are prepared and assembled at departure airfields, briefings are conducted and aircraft loaded during the mounting phase.

1112. Planning of administrative support should consider the following:

a. selection of assembly areas, mounting bases and airfields;

b. administration while in the mounting base airfield including:

(1) transportation,

(2) rationing,

(3) health support, and

(4) accommodation,

c. storage and security of unit stores and equipment;

d. rigging of heavy drop loads;

e. preparation and loading of aircraft;

f. preparation of reinforcements;

g. briefings and rehearsals; and

h. establishment of the supporting organisation for maintenance of the deployed force.

Air Transport Phase

1113. The air transport phase is designed to ensure delivery of the ground force in the proper sequence and at the time and place required to support the tactical plan. Administrative factors include:

a. transit time to landing areas,

b. need for transit airfields or forward mounting bases, and

c. need for forward arming and refuelling points (FARP).

1114. Administrative requirements will normally be limited to:

a. administrative control of pick-up zones and mounting airfields,

b. FARP operations,

c. recovery of disabled aircraft and equipment, and

d. casualty evacuation.

Forward Arming and Refuelling Points

1115. In some airmobile operations, the establishment of one or more FARP may be necessary to sustain logistics support for the air elements involved. FARP should normally hold sufficient fuel and ammunition to sustain the planned aircraft sortie rates. Stocks should not be allowed to drop below the minimum necessary to refuel and rearm tasked aircraft.

1116. The following factors should be considered when establishing a FARP:

a. number and type of aircraft involved in the operation;

b. intensity of operations to be supported;

c. reconnaissance, stepping-up and subsequent FARP locations;

d. layout of landing areas and the safety distances between refuelling and rearming points;

e. establishment of air traffic control services within the FARP area;

f. siting of firefighting equipment;

g. any arrangements for night operations;

h. physical security, including ground and air defence and camouflage; and

i. possible expansion to include a forward mounting base.

MAINTENANCE OF THE FORCE

1117. Planning should cater for the requirements not only of the ground force but also of the air transport elements, if their allocation to the joint force includes administration. ADFP 2 - *Division of Responsibilities Within the Australian Defence Force* details single Service responsibilities for support of airborne operations.

Supply

1118. The quantity and type of supplies and equipment required for airborne operations are dictated by either known initial combat requirements or predicted usage rates for the force. This is also influenced by:

a. enemy situation,

b. ability of the ground force to handle equipment,

c. availability and carrying capacity of air transport aircraft,

d. projected date of link-up or withdrawal of ground forces, and

e. predicted weather.

1119. Airborne forces can only conduct independent operations for limited periods. Sustained operations require supplementation in mobility, combat support and logistics support. Forward bases can be restocked in the forward staging or objective area to reduce maintenance requirements.

1007. Equipment requirements increase in an NBC environment. Planners must consider supply of decontaminants, the increased need for water, reserve stocks to replace contaminated items and health support. Equipment should be cross loaded to avoid total loss of an item, and must be covered or shielded to prevent contamination. This will make stores bulky and require more transport assets and more time to deliver stores.

Mounting Phase

1008. Airborne force troops should remain widely dispersed during the mounting phase to minimise their susceptibility to an NBC threat. Extra transport resources may be required to allow troops to concentrate rapidly for embarkation. Clear marking of key command and control personnel dressed in NBC ensemble will be important as all personnel will look alike. In the absence of respirator voice attenuators, extra means of communication, for example lights, flags and loudspeakers may be required.

1009. As the psychological effect of encapsulation will tend to isolate personnel, time spent masked should be minimised. Commanders should endeavour to communicate with and reassure their personnel.

1010. When wearing NBC equipment it will take longer than normal to conduct checks and load equipment. This is because:

a. personnel have reduced vision and mobility,

b. sense of touch is greatly reduced, and

c. a greater quantity of equipment has to be checked and loaded.

Air Transport Phase

1011. Where the possibility of flying through extant chemical contamination is high, all personnel will need to be masked. At higher altitudes, radiological contamination is a greater danger and NBC ensemble will need to be donned prior to embarkation. Planners must therefore assess the risk to determine a suitable route, TOPP level and altitude. If possible, areas of contamination should be avoided by route selection. The effectiveness of aircrew is degraded significantly if masked.

1012. Where more than one lift of personnel is required, provision must be made to minimise contamination at the embarkation point. Designated areas at the embarkation point should permit contaminated aircraft to return, embark more personnel and depart without contaminating the entire embarkation point. To this end, dirty/clean lines, operational and thorough decontamination areas and collective protection for briefing areas should be established at the embarkation and disembarkation airfields.

1013. Once aircraft have finished transporting personnel and equipment, they will require decontamination before further tasking. The difficulty in decontaminating an aircraft after gross contamination by a persistent chemical agent may preclude further tasking of affected aircraft. Chemical and radiological monitoring throughout this and subsequent phases will be necessary.

Landing or Air Assault Phase

1014. Descent by masked troops impairs vision, produces significant drag and does not permit an effective seal of the mask. The decision to wear masks will be based on the:

a. insertion technique, whether by static-line or free-fall;

b. altitude at which chemical or biological agents or radioactive particles may be found in casualty-producing concentrations;

c. agent type, persistency and corresponding physiological effects; and

d. ability of current equipments to maintain a seal given 130 knot relative wind velocities.

1015. Wearing NBC ensemble affects the speed of the assault. Personnel will move more slowly and with higher probability of heat stress in all climates. Contaminated casualties that are subject to aeromedical evacuation should be either placed within NBC casualty bags or, preferably, subjected to thorough decontamination prior to aeromedical evacuation. Decontamination for the remaining personnel is likely to take place after the assault phase is complete.

Mission Termination Criteria

1016. The criteria for termination of a mission do not change with the introduction of a NBC threat. Such a threat should be considered in setting initial termination criteria.

Decontamination

1017. A decision to decontaminate after the assault phase will be based on:

a. contamination nature and extent,

b. availability of decontaminant,

c. tactical situation,

d. time,

e. need to localise contamination, and

f. future tasks.

A more detailed explanation of the influence of NBC weapons may be found in ADFP 15 - *Operations in an Nuclear, Biological and Chemical Environment.*

907. Airborne communications plans are inherently inflexible due to emission control and aircraft equipment space considerations. Nevertheless the plan should include reserve communications equipment and manpower to cater for unexpected problems or additional requirements. A simple communications plan will be readily understood, adaptable and less prone to breakdowns.

908. Both communications and offensive support for airborne operations require the integration of single Service communications assets, tactical and strategic communications systems, long distance working procedures, security, frequency assignments, provision of manpower and equipment. Integration of Allied communications assets and systems may also be required. The integration of the communications and operational plans should occur at the earliest planning stages, with communications planning staff anticipating requirements where possible. Ongoing review of the communications plan is necessary at all levels.

909. Airborne communications requirements should be economical due to limited space on aircraft and the need for simplicity. This may require multipurpose single links and channels, spare capacity and circuits to promote reliability and flexibility. User demands on the communications plan should be minimised through orders and directives, training and standing operating procedures.

Specific Requirements

910. The following communications links and nets may be required for an airborne operation:

a. The force higher command link from the initiating authority to the AFC will usually be established through an interface with the strategic communications system. This is achieved through the air operations communications system, Army tactical communications should the AFC be land-based or RAN communications systems should the AFC be ship-borne. If the GC assumes command of subsequent operations, a link should be established between the GC and the initiating authority.

b. The force command net, which is a voice net connecting the AFC to subordinate commanders, is used for command of the airborne force.

c. The ground force command net, which is a voice net from the GC to the ground force sub-unit commanders, is usually established using ground force organic communications activated after landing.

d. The air element command net is a net from the air element commander to all aircraft, including escorts and offensive support aircraft.

e. The flight internal net is an ultra high frequency or very high frequency net linking all transport aircraft. More than one flight internal net will be required if more than one flight of transport aircraft is involved in the operation. Offensive support aircraft and escort aircraft will have their own flight internal nets.

f. Offensive support nets are required to coordinate close air support, airspace control, naval gunfire support and artillery support. Guidance is contained in ADFP 11 - *Offensive Support.* The number of offensive support nets should be kept to a minimum.

g. Landing area nets are ultra high frequency or very high frequency nets established as necessary for the security and control of landing areas.

h. Ground and air control links are established from each landing area to the command and control aircraft and monitored by each aircraft. Radio communications should only be used if absolutely necessary. Ground panels, lights or smoke used in accordance with prearranged codes are preferable to enhance force security.

i. Independent airborne operations may require special communications links to the AFC to pass electronic warfare information and intelligence requiring special handling procedures. These links will normally require an interface with the strategic communications system for access to the centres and agencies responsible for the provision of the information. In tactical airborne operations, special communications links will usually terminate at the joint or single Service headquarters with the required facilities. Further dissemination of sanitised information from the headquarters is achieved using general Service communications. Representative communications diagrams for airborne operations are at Annex A.

Emission Control

911. As the force is vulnerable during the air assault phase and reorganisation on the landing area, the use of non-secure radio communications should be minimised before P-hr. If radio communications must be made, the use of codewords should be maximised. Ground-to-air signals using airdrop panels, lights or smoke using prearranged codes should also be employed.

912. The communications plan includes the emission control policy, which should manage all electromagnetic emissions of the airborne force to prevent premature disclosure of the presence, location and composition of the force. Provision should be made for sufficient equipment to provide adequate warning.

913. Policy will be effected by an emission control plan issued as a supplement to the main communications plan. The emission control plan should be sufficiently flexible to cope with change and address a number of contingencies to cover anticipated shifts in the tactical situation. Further detail relating to the format and implementation is contained in ADFP 24 - *Electronic Warfare.* Commanders should recognise the potential for obtaining intelligence from electromagnetic emissions; the greater the reliance on electronic communications for command and control, the greater the need for effective emission control.

ELECTRONIC WARFARE

914. Detailed information on electronic warfare is to be found in ADFP 24. Offensive electronic warfare complements offensive support by engaging area targets (such as radio nets) and command and control systems and by neutralising targets. Ground-based electronic warfare units may be within range or prepositioned to support tactical airborne operations. Electronic warfare depends upon the:

a. threat;

b. number, location and types of targets;

c. equipments capable of being deployed;

d. existing information databases on the enemy; and

e. need for surprise.

915. Electronic warfare provides intelligence for operations and operational security while defensive electronic warfare contributes to the integrity of the airborne force command, control and communications system. In airborne operations electronic warfare provides support to:

a. intelligence,

b. offensive command and control warfare,

c. defensive command and control warfare,

d. suppression of enemy air defence, and

e. counter surveillance and target acquisition.

916. Electronic warfare assets can provide timely signals intelligence on enemy dispositions, identity, locations, strengths, equipment, capabilities, support and intentions. This intelligence can either contribute to operations directly or be used to trigger other surveillance and intelligence assets. Electronic warfare support to intelligence will be provided in all phases of the operation, including late advice of enemy status during the air transport and air assault or airlanding phases.

917. Electronic deception should be integrated with the overall deception and operational plan. Electronic warfare can assist deception plans through the manipulation of enemy electronic support measures and targeting of enemy acquisition systems. Imitative communications deception can provide an alternative to jamming for disruption of enemy command and control systems. Electronic support measures will also assist in assessing the success of friendly deception.

918. Airborne operations are extremely vulnerable to enemy air defence. Aircraft electronic warfare systems provide a measure of protection and all aircraft participating in airborne operations should be configured with appropriately programmed electronic warfare platform protection systems. In addition to the platform protection systems, prepositioned, airborne and strategic electronic warfare units can contribute to suppression of enemy air defences by:

a. warning of the approach, direction and composition of enemy aircraft;

b. attacking enemy air-to-ground and air defence command and control communications; and

c. locating and identifying targets for physical suppression.

Electronic Warfare Coordination

919. Electronic warfare support should not interfere with friendly command, control and communications. Electronic warfare targets are not confined to formal boundaries and coordination of electronic warfare is required to avoid duplication of effort.

920. Dedicated electronic warfare assets may be assigned to a force commander, depending on:

a. availability,

b. enemy offensive and defensive weapon systems en route to and at landing areas, and

c. the concept of manoeuvre and deception plan for the operation.

921. Where electronic warfare assets are provided to the AFC in support of the airborne operation, an electronic warfare liaison officer may be provided by the supporting agency.

Annex: A. Airborne Operations Communications Diagrams

AIRBORNE OPERATIONS COMMUNICATIONS DIAGRAMS

MOUNTING PHASE

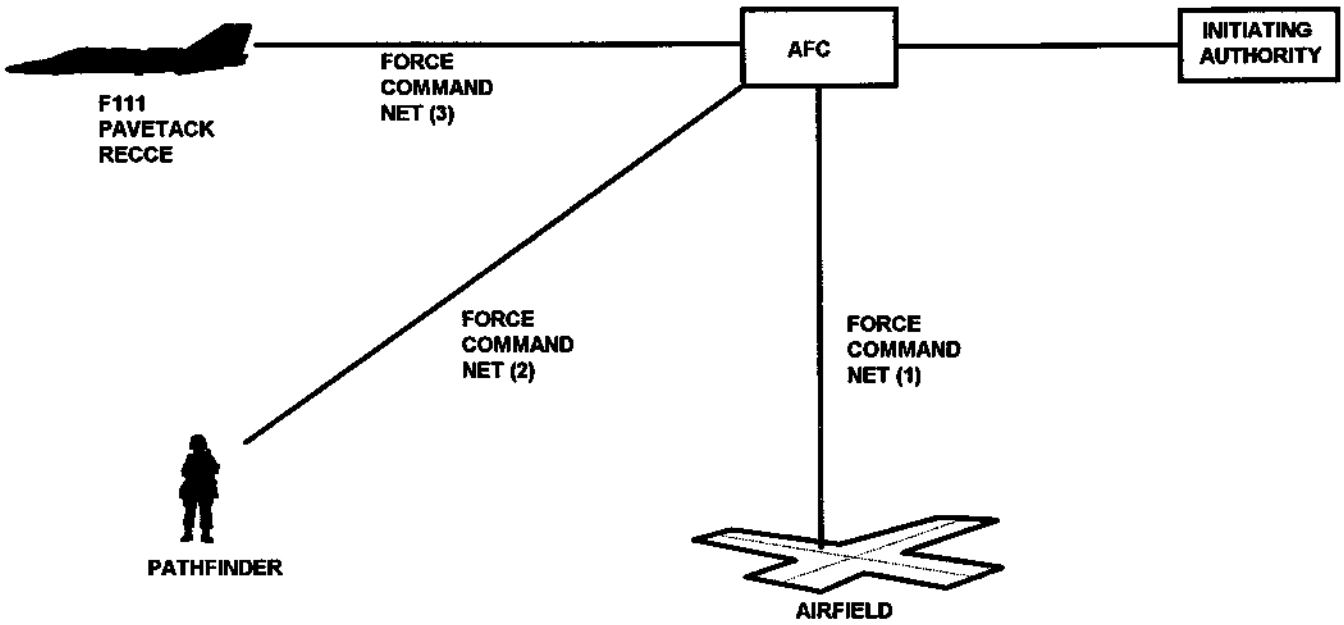

AIR TRANSPORT PHASE

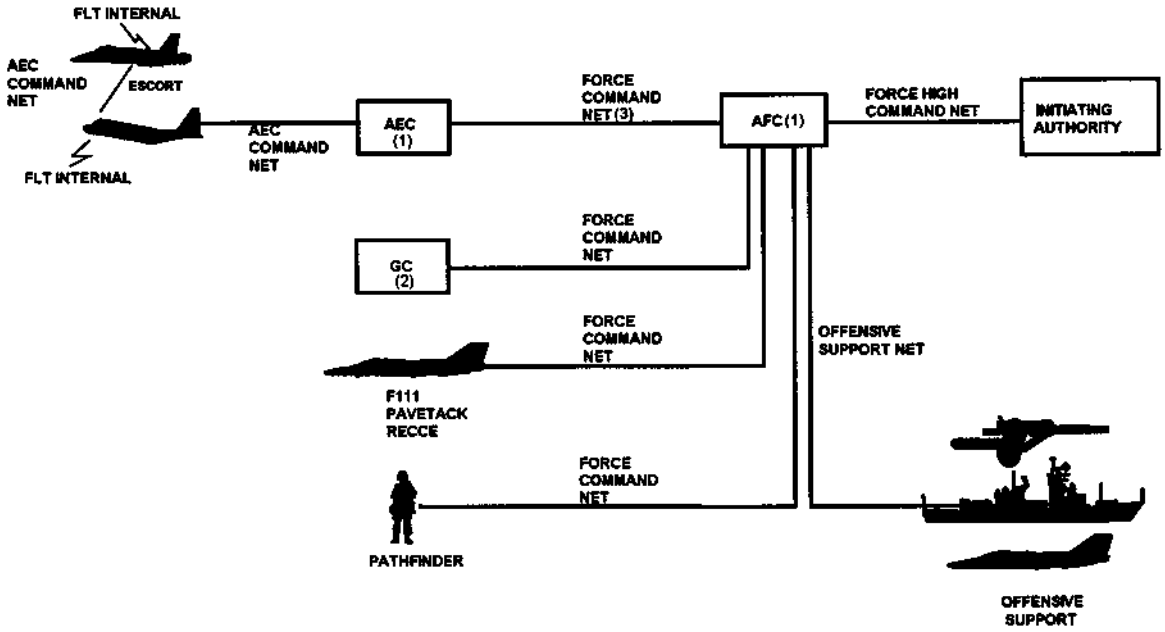

AIR ASSAULT OR AIRLANDING PHASE

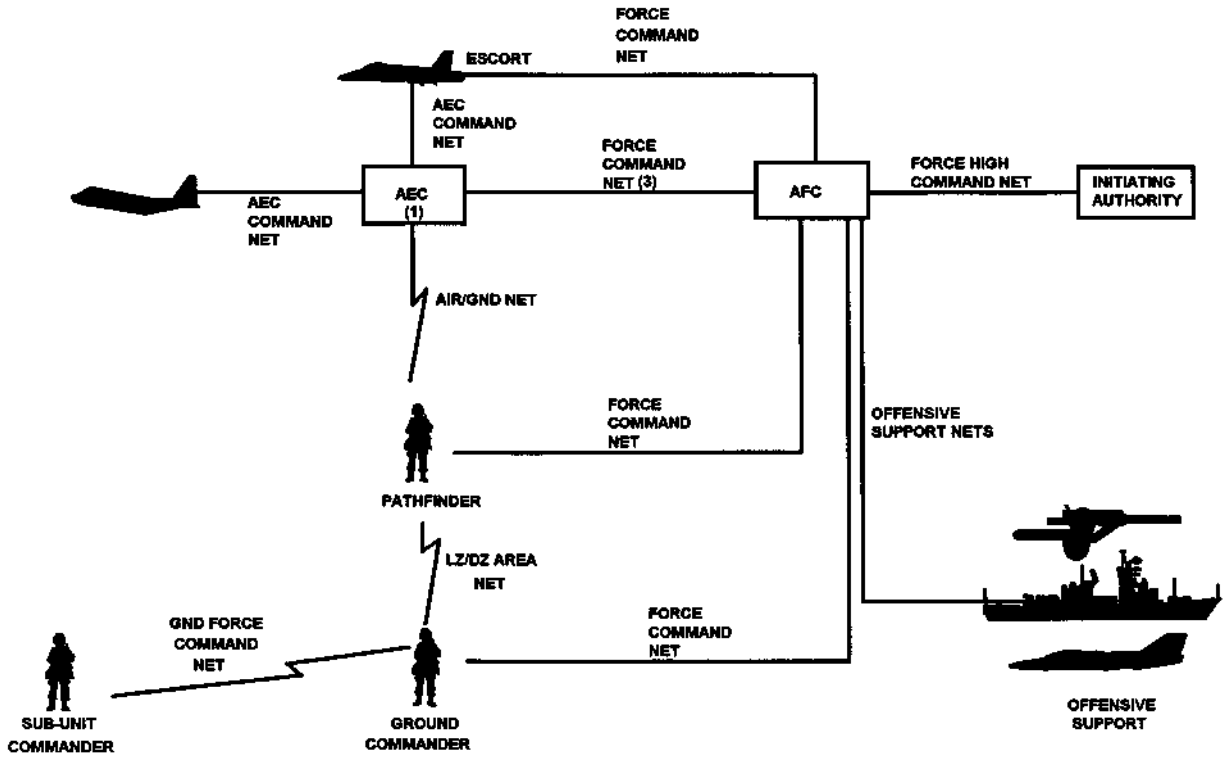

Notes:

1. AFC and AEC may be airborne.
2. Aircraft radio fit will limit number of nets.
3. Force command nets may be separate means.

Coordination

808. All airborne operations require a detailed and coordinated fire plan not only to best employ the allocated offensive support assets but also to ensure the safety of the airborne force. Consequently, coordination of fire support is centralised at one level under the force senior artillery commander, who should be collocated with the force commander to enable rapid amendment of the fire plan and the provision of timely advice. Where a command and control aircraft is allocated, the artillery commander should travel with the force commander to coordinate fire support. The aircraft must have communications to all fire units or to a fire support coordination centre or other ground agency.

809. To ensure the detailed direction and timely coordination of fire support, battery commanders, forward observers and forward air controller parties or air contact officers should be included in initial aircraft sorties. The fire plan will normally be timed to employ naval gunfire support and close air support missions before H-hr or P-hr, artillery missions throughout and armed helicopter support during the landing or air assault and reorganising or rallying of the ground force. Once the ground force is capable of manoeuvre, fire support may revert to mortars, artillery and armed helicopters in a close air support role with naval gunfire support and fixed-wing close air support operating on defensive fire or battlefield air interdiction tasks.

810. Once assault formations are established on the ground, the artillery forward observers and the mortar fire controllers attached to those formations will direct the fire of the guns, mortars and naval gunfire support units. Similarly, a ground-based forward air controller may be allocated to the force. Normally the forward air controller is collocated with other forward observers or mortar fire controllers on landing areas as the ground force rallies. The forward air controller has communications with the ground and air elements and assumes the task of close air support coordination.

Communications

811. If the artillery commander joins the force commander in a command and control aircraft, fire support control on a minute-to-minute basis may be effected using purpose fitted radios. Communications are simplified because of the differing frequency bands used, eg close air support on ultra high frequency and naval gunfire support and artillery and mortars on very high frequency. Forward observers, mortar fire controllers or forward air controllers tasked to control specific missions will deploy with communications for this purpose and should communicate with the artillery commander throughout.

Termination of Offensive Support

812. Once ground forces are established on landing areas and the fire plan is completed, allocated close air support, naval gunfire support and artillery units may revert to other command arrangements. For instance, they may be placed under operational authority of the ground commander. Fire support for ground forces will normally be provided by organic fire support units. Should additional artillery or close air support be required, requests will be handled through the appropriate headquarters.

704. Similarly, the use of night vision goggle equipment permits operations at night at altitudes which significantly improve the ability of the transport force to avoid detection and interception. In addition, they enhance the degree of surprise attainable in opposed operations.

Rallying

705. The ground tactical plan will determine the speed of assembly required of the ground force, which in turn will determine the nature of the procedures used during the landing/air assault. Rapid rallying of a large force will require minimal separation between elements in the formation and a drop zone (DZ) larger than that required for individual aircraft or aircraft in trail. Large DZ may also require larger scale preliminary operations in order to ensure their security. Facilities required at the landing zone (LZ) to enable the rapid arrival, unloading and departure of aircraft should be sufficient to capitalise on rapid rallying.

706. A formation airdrop reduces the time to insert the ground force but increases lateral dispersion and, therefore, requires a wider DZ than a single aircraft drop. Closer aircraft formation reduces the flexibility to manoeuvre, to either frustrate enemy countermeasures or to improve the accuracy of the drop once the DZ has been sighted.

707. Size of ground forces in an airborne operation can vary from a small number of troops, such as in a special forces operation, to the deployment of a battalion-size group or larger. Generally, the larger the force or the shorter the mounting time available, the more inflexible the tactics and procedures which can be employed during the landing/air assault phase. Operations which can be effected using single aircraft, or single aircraft approaches to landing areas, offer the greatest accuracy and flexibility and therefore the best chance of each aircraft successfully completing its mission.

Paratroop and Equipment Landing Area Considerations

708. Procedures for delivery of troops and equipment onto a DZ for paratroop operations will require drop heights which vary from almost ground level for low altitude parachute extraction systems, through to 500 feet above ground level for paratroops and up to 1300 feet above ground level for some heavy drop equipment.

709. Drop heights required will influence the nature of tactics and procedures employed by the air transport force during the air assault phase. During this phase the transport force is most vulnerable, particularly when operating at higher altitudes over a defended DZ.

710. Size and composition of a paratroop force also affects the speed at which it can rally on the DZ. The size of the DZ will determine whether personnel and equipment can be dropped simultaneously, for example composite wedge and personnel loads onto a single DZ, or heavy drop and personnel loads onto parallel DZ. The option exists to drop both heavy drop and personnel loads onto the same DZ. In this situation, the heavy drop would precede the paratroops and the GC would accept the risk of obstacles on the DZ.

Selection of Landing Areas

711. Selection should be based upon the advice of the GC for ground aspects and the AEC for air aspects. General guidance is given in chapter 12 regarding selection and marking of DZ. Landing area dimensions can affect other planning considerations, such as the speed of rallying and size and composition of ground forces to be inserted.

712. For both static-line and free-fall parachute insertions, insertion of the paratroop element should be accomplished by one single pass over the DZ. For security reasons, multiple passes are inadvisable. The width of a DZ, for example, dictates the number of aircraft that can be accommodated in a single pass, and hence dictates the formation procedures which can be

employed. The length of a DZ determines the number of personnel or the amount of equipment which can be dropped by each aircraft. These constraints, together with the capacity and number of aircraft available, determine the size of the ground force that can be inserted in a single pass.

713. Airmobile and airlanded operations involve the insertion of a ground force by either rotary or fixed-wing aircraft into an LZ/advanced landing ground (ALG). The aim of both types of insertion is to build up ground forces as rapidly as possible. If there are no limitations on either the number of aircraft or the size of landing area to be employed, the complete ground force should be inserted simultaneously.

714. Noting the advice of the AEC, the force commander has overall authority for determining the suitability of a proposed landing area. This decision should be based not only on the capacity of the landing area but also on facilities that may be required to support operations.

Clandestine or Overt Operations

715. The decision to employ either a clandestine or an overt landing or air assault will influence tactics and procedures. Single aircraft operating over individual routes to landing areas offer the greatest opportunity for maintaining the security of a clandestine operation. Typically, clandestine operations involving special forces occur at night with pilots using night vision goggles.

Approaches and Landings

716. A large number of aircraft in relatively close formation is difficult to manoeuvre and extremely vulnerable to enemy action, particularly at the speeds and heights required during most methods of aerial delivery. However, if penetration to the objective is successful, this tactic offers the advantage of a more rapid insertion of the ground force, albeit with wider dispersion over landing areas. Wherever possible, use of large aircraft formations should be restricted to operations where neutralisation of enemy opposition can be guaranteed.

717. An opposed air assault is a landing where opposition is known or expected and should only be undertaken when no other option is available. In most circumstances, opposed landing areas are also objective areas. Opposed air assaults which expose transport aircraft to action by enemy fighters, air defence missiles or ground fire during the landing/air assault phase should only be chosen as an option of last resort. This is particularly important when the same aircraft are required to complete the remainder of the air assault, conduct air maintenance or extract the ground force.

718. Split navigation approaches to landing areas are more difficult to coordinate and may increase the time required for insertion. Nonetheless, this method is more secure and the tactics which can be used to reduce the effect of enemy opposition are more varied, flexible and effective. For example, single aircraft can maximise the effectiveness of terrain shielding, have greater manoeuvrability and can use the advantages of night operations at low level using night vision goggle tactics to best effect.

Support for the Airborne Force

719. Support for the airborne force will invariably use the airspace over both landing and objective areas. Management of that airspace during the landing/air assault phase is the responsibility of the AEC and involves the coordination of:

a. air transport force;

b. fighter escort for the air transport force;

c. close air support;

d. naval gunfire support;

e. indirect fire support; and

f. integration with any battlefield air interdiction, strike or dedicated electronic warfare support aircraft.

720. Airborne operations will involve at least one, and possibly all, of these coordination tasks. Where an airborne operation involves complex command and control procedures for airspace coordination, the facilities normally used by the AEC in the lead transport aircraft would generally be inadequate for the task. In this case, a mobile air operations team and dedicated command and control facility should be established. When this occurs the responsibilities of the commander of the air transport force prevent him from adequately discharging the duties of AEC.

721. Accurate and comprehensive intelligence is vital to the success of the landing/air assault phase in any airborne operation. The intelligence information required is similar to that needed for the air transport phase. Both vertical and oblique imagery of landing areas and likely approaches should be provided if available.

Crew Duty Limitations

722. Some restrictions on the planning of protracted operations may be imposed by crew duty limitations. Crew duty planning times are prescribed in standing operating procedures and are intended to ensure aircraft safety is maintained. When circumstances dictate, these duty periods can be marginally exceeded and decreased safety standards accepted. However, in the planning stage, allowance should be made for crew duty limitations.

Assault Phase Plan

723. The final plan for the landing/air assault phase will be a compromise between:

a. priority of the mission;

b. the ground tactical plan;

c. resources available to the AEC; and

d. time, weather and likely effectiveness of opposition.

SECURITY OF THE LANDING AREA

724. Security measures which may be employed within the landing area may include observation by ground or air elements, indirect fire using artillery or naval gunfire support, or surveillance of the area by pathfinder teams or independent ground forces.

725. Pathfinder elements may be inserted by clandestine means to observe, report and provide limited security until the initial assault troops are established on the ground. These advance elements will assist in the rapid rallying of the ground force by marking main and alternative landing areas, rallying points or assembly areas. Further duties of pathfinder teams are at chapter 6.

726. A separate and possibly independent ground force may be tasked to secure landing areas, with the air assault becoming an airlanding. The initial security force would continue to provide security until the GC is satisfied that he has sufficient forces in the area to provide his own security. Alternatively, the airborne force may have an objective removed from the landing area, in which case the assigned security force remains until the airborne force has completed its mission.

727. Where landing areas have not been secured the leading assault formation of the ground element must provide the required security. Objectives immediately adjacent to landing areas may also be given to he leading or initial assault formations to assist in establishing a perimeter defence

of sufficient size to accommodate the remaining elements of the ground force. Security operations may also include the occupation of high ground beyond the immediate vicinity of landing areas, particularly if aircraft are to overfly them.

CONTROL OF THE LANDING AREA

728. During the planning phase, the layout of landing areas is considered in detail and an occupation plan agreed which may need to allow for the simultaneous operation of a number of aircraft into the landing areas. For example, during composite airborne operations this may involve both rotary wing and fixed wing aircraft operating into LZ/ALG simultaneously. Landing areas may contain:

a. a forward support base, deployed and maintained by air;

b. ALG for short range transport or medium range transport aircraft;

c. landing sites for helicopters;

d. forward arming and refuelling points;

e. health support elements; and

f. rigging area for external and airdrop loads.

Control Elements

729. If pathfinder teams have not been employed, initial landing area control will normally be undertaken by the second-in-command of the leading assault formation and will involve the use of rallying points to reorganise the dispersed elements of the ground force. For airmobile operations, landing points for the second and subsequent lifts will be the same as the first lift until such time as control arrangements are established and changes are required. For paratroop operations it will be normal procedure to employ pathfinder teams to control both primary and alternative DZ.

730. As the size of the force increases, control will usually be vested in a designated control party which has communications with incoming aircraft. The party should be trained and equipped to marshal aircraft, release loads and control troop movement. The party should be located up-wind on landing areas for good observation of incoming aircraft and to provide a central point of coordination. Each unit or sub-unit to deploy within the landing area provides guides who report to the control party and are allocated their area. For a field battery or mortar platoon, these guides will include aircraft marshals who handle the fly-in of sub-units.

731. Changes to the fly-in program are authorised by the force commander. The control party is advised of alterations to serials within the air movement table and makes local arrangements to meet the change. The landing should be conducted in accordance with the air movement table, using minimum radio transmission. Aircraft operating above or into the landing area will use planned routes into briefed landing areas.

Mobile Air Operations Team

732. Airlanded operations at brigade level may involve the insertion of a mobile air operations team. This team will usually follow the initial assault formation and provides an air traffic control service with a maximum radius of 10 nautical miles. The team may deploy with navigation aids such as non-directional beacons for incoming aircraft.

733. The mobile air operations team is a local air control agency only. For airlanded or composite airborne operations, the team will be deployed with the initial assault formation to control the subsequent airlanding of the remainder of the force. Further detail is at paragraph 435.

Mobile Air Terminal Unit

734. For airlanded operations involving medium range transport aircraft, a mobile air terminal unit element may be required to provide trained personnel and cargo-handling equipment for unloading. The unit will also allocate passengers and equipment to aircraft for backloading in accordance with the priorities established by the AFC.

735. The organisation, responsibilities and duties of a mobile air terminal unit are detailed in ADFP 14 - *Air Transport.*

Air Transport Support Regiment

736. This is an Army unit which provides air logistic support for both parachute and airlanded operations. During parachute operations, unit personnel rig airdrop loads and provide parachute elements to jump with the paratroop unit to control and clear the heavy cargo DZ. This DZ control element can also perform aircraft loading and unloading tasks as well as helicopter external load operations and other air terminal tasks.

737. During airlanded operations, unit elements have the ability to handle loading and unloading tasks along with other terminal tasks in conjunction with the mobile air terminal unit. The unit also provides air transport liaison sections to coordinate logistic functions at forward airfields. Air logistic support and the packing and provision of parachutes for paratroop drops is provided by units of the Logistic Support Force in peacetime.

EGRESS, RECOVERY AND SUPPORT CONSIDERATIONS

738. The factors which affect planning for egress from landing areas and return to the base most suitable for recovering the air transport and ground forces are similar to those affecting planning for the air transport and landing or air assault phases. These factors also affect air maintenance to support ground forces.

739. Planning considerations depend on whether:

a. transport aircraft have sufficient radius of action to depart from the mounting airfield and recover to either the mounting or other suitable airfield,

b. a requirement exists to establish a forward operating base to sustain subsequent air operations to support or recover ground forces,

c. multiple sorties are required of all or some aircraft in order to complete extraction of ground forces or to conduct immediate resupply missions, and

d. crew availability or crew duty restrictions limit the use of the air transport force.

607. Command and control arrangements need to make provision for:

a. employment of pathfinders,

b. selection of a `window´ for execution of phases,

c. diversion to alternative landing areas if required,

d. extraction of ground forces,

e. succession of command, and

f. termination of the mission.

608. The force commander, acting on the advice of the two principal subordinate commanders, may order delays to the execution of the air transport phase. Any delay beyond the execution `window´ must be cleared with the initiating authority.

609. Where practicable, the order to divert to alternative landing areas should come from the force commander. However, where the force commander exercises command from a remote facility there should be clearly understood provisions for the AEC or the GC to exercise the prerogative to divert.

610. Orders to terminate the mission should come from the force commander other than in the following circumstances:

a. inability of the air transport force to penetrate adverse weather at both primary and alternative landing areas, and

b. identification of an air defence threat sufficient to preclude mission success.

Orders should clearly state that, in such circumstances, termination orders may be issued by the AEC.

611. Succession of command for the forces of both AEC and GC must be established. A large formation of aircraft will generally be divided into flights, each having a lead and deputy lead aircraft. The deputy leader of the lead flight should be capable of assuming command of the formation in the event of technical failure or loss of the formation lead aircraft. Officers in the ground force succession of command should, ideally, be collocated with their air transport counterpart. Procedures should be established to effect transfer of command of either ground or air forces while en route, with or without communications. Due to the circumstances in which succession of command is likely to occur, deputies should be familiar with the initiation of search and rescue plans and the deployment of depleted ground forces.

Air Transport Force Operations

612. Procedures for operation of the air transport force are contained in the standing operating procedures of elements concerned. Procedures adopted should depend upon:

a. availability and accuracy of charts or imagery of possible routes,

b. meteorological information,

c. intelligence,

d. requirements for deception,

e. location of mounting and recovery airfields and forward operating bases,

f. requirements for escort aircraft and/or the suppression of enemy ground opposition,

g. communications requirements,

h. terrain along the route selected which will determine:

(1) availability of terrain shielding, and

(2) heights which must be flown at night or to penetrate adverse weather, and

i. requirements for preliminary operations.

613. Air transport force standing operating procedures provide for operation of formations and single aircraft at night and for the penetration of adverse weather. However, the use of these procedures may necessitate flight at an altitude which might compromise the security of the mission. A balance between standing operating procedures and security requirements may be required. Similarly, these procedures may also necessitate the use of tactical navigation aids and communications which breach emission control or communications security requirements.

Pathfinders

614. The decision to use pathfinders is likely to be dependent on the size and complexity of the operation. Employment of pathfinders may enhance the success of an operation in providing control, both en route to a landing area and during the initial air assault. It is normal practice for pathfinder teams to be employed on paratroop operations.

615. The following responsibilities and tasks are normally given to pathfinders:

a. Light observation helicopter pathfinders perform:

(1) tactical route reconnaissance in advance of an operation,

(2) selection of rendezvous,

(3) reconnaissance and selection of primary and alternative landing areas and downed aircrew pick-up points,

(4) navigational assistance for each aircraft to selected rendezvous and landing areas,

(5) air observation post and forward air controller tasks for the insertion, and

(6) communications relay.

b. Pathfinder teams perform:

(1) electronic or visual marking of main and alternative landing areas;

(2) control of drop zones (DZ) or, in conjunction with a mobile air operations team, assistance with control of advanced landing grounds;

(3) reconnaissance and selection of primary and alternative DZ with support from light observation helicopter pathfinders;

(4) reconnaissance and marking of unit and sub-unit rendezvous and assembly areas;

(5) gathering and reporting of local tactical and weather information;

(6) establishing and maintaining communications with the force commander;

(7) conducting local reconnaissance and marking routes to objective areas; and

(8) conducting surveillance of likely enemy approaches to landing areas.

616. Pathfinder activity before H-hr/P-hr risks detection by the enemy who may then make plans to counter the force. This risk is increased where a radio link is used to the force commander.

617. An alternative landing area may necessitate the requirement for a second pathfinder team. This second pathfinder team should normally be subordinate to the first team and use the same communications links.

Communications

618. While the communications equipment of the air transport force is likely to impose some restrictions on command and control of the airborne force by the airborne force commander, it is generally adequate (although insecure) for the control of aircraft in tactical formation. Where necessary, airborne operations should be conducted in radio silence or under strict guidelines. In a totally emission controlled operation, formations and parachute operations can be controlled by visual signals and well briefed and practised procedures. Where radio communications between aircraft or between the force commander and the airborne force are necessary, they should be restricted to short transmissions of codeworded traffic.

619. Similarly, the use of active aids to tactical air navigation and formation flying, such as tactical air navigation and radar, should be kept to an absolute minimum. Use of these aids, however, may be essential for operations at night or for penetration of adverse weather.

Weather

620. An accurate weather forecast is essential for the success of any airborne operation. Procedures to cater for the possibility of encountering and penetrating adverse weather are contained in standing operating procedures for aircraft types concerned. These procedures provide for safe operation of transport aircraft; however their use may jeopardise the security of the mission by causing the air transport force to separate aircraft to the extent that the formation loses concentration of force during the critical airlanding/air assault phase. Bad weather may also force aircraft to climb to a minimum safe height to avoid terrain hazards, leaving them vulnerable to detection by enemy radar and engagement by air defence weapons.

621. Where aids to minimise the adverse effects of weather are unavailable, or their use is proscribed because of communications security or emission control requirements, the landing/air assault plan should cater for alternative landing areas or allow for a delay. Present equipment available to the transport force requires visual meteorological conditions over the objective area to guarantee any degree of success or accuracy. Pathfinders may assist by providing timely advice of weather conditions.

Search and Rescue

622. Provision of search and rescue is vital for the morale of units participating in airborne operations. Where appropriate, plans for the search and rescue component of the air transport/air assault phase should make provision for:

a. rescue by helicopter where range permits or naval units if over-water routes are used,

b. nomination of downed aircraft pick-up points where search and rescue efforts will be concentrated,

c. the use of search and rescue beacons consistent with operational security considerations,

d. carriage of adequate survival equipment by aircraft,

e. briefings on escape routes and procedures for all personnel, and

f. supply drops to survivors where rescue in the short term is impracticable.

Air Route Selection

623. While the AEC will confer with the GC, the design, initiation and execution of the airborne element's flight path remain the prerogative of the AEC. All available intelligence concerning the route to and from primary and alternative landing areas should be made available in real time to the AEC from the planning phase until the first aircraft passes the initial point en route to landing areas. The use of light observation helicopter pathfinders to assist with the provision of route intelligence and navigational assistance should always be considered by the AEC.

b. Aircraft fly to emplaning areas, load personnel and equipment, and then proceed to the mounting airfield or departure point.

c. A combination of the two previous procedures is adopted, namely:

(1) aircraft fly to emplaning areas to load equipment which is then airlifted to the mounting airfield, or

(2) aircraft depart on the operation from dispersed sites and stop en route to emplane personnel.

508. Regardless of procedures used, the air element commander (AEC) is responsible for ensuring that aircraft arrive at the objective area in order and on time.

Forward Bases

509. During the initial appreciation or joint planning phase of airborne operations it may become apparent that the distance between the mounting base and landing areas or the restricted allocation of air transport resources will not support a rapid build-up of ground forces. Where practicable, operations should be mounted as far forward as possible in order to shorten the transit distance and to reduce turnaround time of the air transport aircraft. This is particularly important when:

a. large distances exist between the mounting areas and landing areas or objectives,

b. insufficient aircraft are allocated to insert ground forces in one lift,

c. the air transport force is required to undertake subsequent air maintenance of ground forces,

d. extraction of ground forces is to be undertaken at short notice, or

e. a composite airborne operation is planned and security allows for the establishing of a forward operating base as close as is practicable to landing areas.

510. Forward bases reduce the need for transport aircraft during critical times of the operation, simplify administrative procedures and minimise transit times. Forward bases include forward mounting bases, forward operating bases, mounting airfields and recovery airfields.

511. The airborne force should establish a higher command link at the forward base to monitor supporting operations. Fixed communications systems, if available, can supplement integral force communications assets. A forward base must be able to support the operational and administrative requirements of the airborne force. A check list is at Annex A.

Forward Mounting Bases

512. A forward mounting base may be established as a staging area to:

a. reduce the duration of the air transport phase by positioning forces closer to the objective area,

b. acclimatise ground forces, or

c. provide a diplomatic signal in a time of increasing tension.

513. The employment of a forward mounting base may jeopardise security. Time at a forward mounting base should therefore be minimised. In the case of an overt move for diplomatic purposes, elements may occupy the forward mounting base for a considerable period. Where this occurs the conflicting demands of security and maintenance of morale must be addressed. It is preferable that the forward mounting base be collocated with the mounting airfield.

514. The airborne force should be able to concentrate on operational matters when at the forward mounting base. All support functions including administration and security should therefore be performed by Service support agencies or by a nominated unit. If all or part of the air transport force is to be used in multiple sorties to insert or resupply the ground force, then the following additional facilities may be needed:

a. accommodation, rest and messing facilities;

b. briefing/debriefing facilities for intelligence, meteorology and mission planning;

c. airdrop rigging facilities and a supply of airdrop equipment if aerial delivery is to continue; and

d. aircraft loading/unloading facilities.

The plan may also need to take into consideration time necessary for configuration changes to transport aircraft.

Forward Operating Bases

515. A forward operating base should be as close as is practicable to landing areas for quick turnaround of the air transport aircraft with minimal physical security measures. Security of a forward operating base is the responsibility of the ground commander (GC). In the case of airmobile operations a forward arming and refuelling point may be incorporated. In selecting an area for a forward operating base, the following guidance is given:

a. It should be concealed from view and beyond enemy direct and indirect fire range.

b. It should be collocated with other friendly forces to reduce the GC's requirement for physical security. If independent, forward operating bases may require an additional ground force element to provide physical security. Alternatively, physical security may be provided by the last element of ground forces to depart from the forward operating base. In this case, the last lift would be similar to an extraction which may require additional offensive support to provide security.

c. It should be large enough to accommodate the ground force and the air transport force occupying it. However, if it is too large then its security may present difficulties to the GC.

d. An alternative forward operating base should also be nominated in case it is required during the insertion or for an unexpected/immediate extraction of ground forces.

e. Once abandoned, a base should not be reoccupied unless properly cleared and secured.

f. The logistics effort required to preposition aerial delivery equipment at forward operating bases to support an airborne operation may be significant.

Mounting Airfields

516. Airborne operations are executed from mounting airfields. In large scale operations several airfields may be used. The mounting airfield should preferably be a Service facility with requisite ground staff, services and fixed installations. The airborne force should arrive at the mounting airfield self-contained and prepared for operations. Stores, rations and equipment should already be prepared and stowed for deployment. Administrative support should be provided whenever possible and be controlled by the mounting headquarters.

517. The air transport component may not be based at the mounting airfield, but it is preferable that all elements be collocated to minimise loading time. The security implications of a large build-up of air and ground resources at the mounting airfield should be considered in the light of air and ground threats.

518. A mounting airfield control organisation should be established to control emplaning and to effect liaison between the airborne force and base administration. This organisation should comprise a command element provided from the airborne force, force emplaning teams, base support staff and possibly movement control and security staff.

519. The functional requirements of a mounting airfield are similar to those of a forward mounting base but include aircraft handling. A check list is at Annex A.

520. Actions at mounting airfields may include:

a. aircraft preparation,

b. rigging of airdrop loads,

c. loading of heavy drop equipment,

d. chalk muster parades,

e. conduct of parachute parades during which final manifesting and equipment checks are conducted,

f. final meteorological checks and aircrew briefings by the AEC, and

g. emplaning.

Recovery Airfields

521. If the radius of action of the air transport force is insufficient to permit return to the mounting airfield, or a requirement exists to further support the ground force, a recovery airfield with some or all of the following facilities must be within range:

a. runways, taxi-ways and aprons of sufficient strength to support sustained operations by the transport and close air support aircraft;

b. navigation aids which permit recovery of aircraft in adverse weather;

c. medical facilities to cater for injured aircrew or aeromedical evacuation of personnel from the objective area;

d. facilities and personnel to provide essential maintenance and repair for battle-damaged aircraft; and

e. adequate petrol, oil and lubricants.

Security

522. The success of an airborne operation may depend upon achieving surprise. High levels of operational security are thus essential. The security plan should address all aspects of the mounting phase of the operation.

Aircraft Parking

523. The air movements organisation should arrange parking space at mounting airfields. Adequate dispersion and camouflage must be planned to maximise security and minimise vulnerability. Aircraft are assigned a chalk number which should be readily visible to emplaning personnel. The mobile air terminal unit should provide unit commanders with a parking plan which contains airfield layout, location of aircraft by chalk number, location of spare aircraft and access routes.

Loading Procedures

524. As airborne troops are most vulnerable during and immediately after landing, measures should be taken to minimise risk:

a. Troops should be tactically cross-loaded to speed rallying of sub-units on landing areas and to minimise the effect of aircraft losses (see Annex B).

b. Essential crew-served weapons and ammunition should be carried by individual crew members rather than in separate containers.

c. Equipment and personnel should be loaded together to reduce time for link-up.

d. Artillery and mortars should be available as early as possible to release other forms of offensive support.

525. Responsibility for loading RAAF aircraft is detailed in ADFP 2 - *Division of Responsibilities Within the Australian Defence Force.* Aircraft captains should always approve aircraft loading. Army units moving by air are responsible for preparation and delivery of their own equipment, vehicles and weapons to the loading area. Army is responsible for providing air supply parachute systems, aerial delivery equipment, air dispatch crews and sling systems for helicopter operations. Army is also responsible for preparation and rigging of airdrop and slung loads by suitably trained specialists.

526. The documentation necessary for air movement of cargo and personnel is contained in ADFP 14 - *Air Transport* and includes:

a. deployment planning data sheets,

b. air movement tables,

c. aircraft loading tables, and

d. load manifests.

Responsibilities for preparation and distribution of these documents is also contained in ADFP 14.

Annexes: A. Planning Check List for Forward Mounting Base/Mounting Airfield

B. Example of Tactical Cross-loading of an Infantry Battalion

PLANNING CHECK LIST FOR FORWARD MOUNTING BASE/MOUNTING AIRFIELD

1. The following functional requirements should be considered in selection and establishment of a forward mounting base (or forward operating base in certain circumstances):

a. personnel accommodation - may be fixed construction or tent-lines but must have adequate ablution and latrine facilities for the force;

b. messing - fresh rations if possible;

c. health support - facilities and staff to treat minor ailments (see chapter 16);

d. communications - fixed communications (preferably the ADF communications network) to supplement the force's high frequency rear link;

e. office accommodation - operations rooms, briefing facilities and accommodation for key commanders and staff;

f. secure storage for documents, weapons, parachutes and stores;

g. canteens and amenities;

h. rehearsals - open areas which may be used for ground force drop zone rallying and operational rehearsals;

i. parade facility - a well lit area for chalk parades is required at the mounting airfield (this must be close to the aircraft parking area to facilitate parachute parade and aircraft loading);

j. transport and materiel handling equipment;

k. traffic control;

l. security; and

m. airdrop load rigging/parachute packing and storage area.

2. A mounting airfield must also be capable of supporting the force air component. Functional requirements should include:

a. aircraft refuelling;

b. maintenance;

c. load-handling equipment;

d. air traffic control;

e. meteorological services; and

f. aircraft parking areas - if not tactically dispersed, aircraft should be parked in order of take-off so that towing or pushback is not required.

EXAMPLE OF TACTICAL CROSS-LOADING OF AN INFANTRY BATTALION

LANDING PLAN

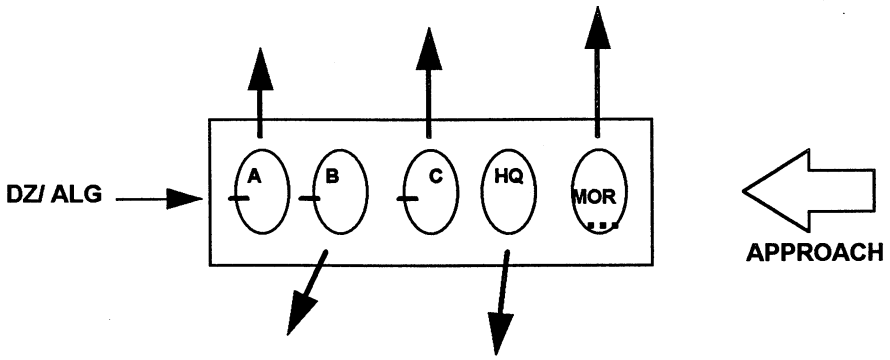

Note: Tactical groups are dispersed in eight or more aircraft to ensure concentration on the DZ/ALG by sub-unit. The mortar platoon, in order to be into action early, generally emplanes last and exits first.

LOADING PLAN

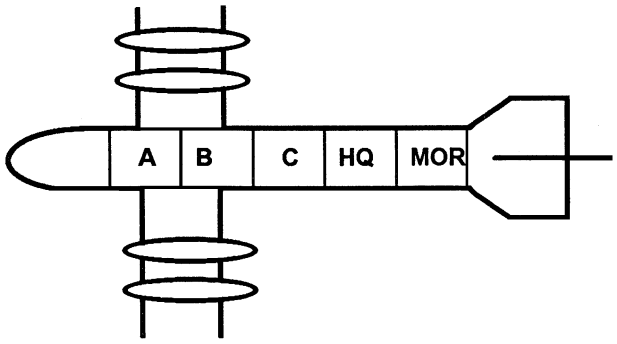

This example shows A Company, B Company, C Company, battalion headquarters and the mortar platoon loaded to exit the aircraft in accordance with the landing plan.

b. The landing (or air assault) plan is devised to meet the needs of the ground tactical plan and considers potential airlift capability and landing sequence required by the ground commander (GC).

c. An air transport plan is prepared to meet the needs of the landing plan.

d. A loading plan is then devised to suit the requirements of the air transport plan.

e. The staging plan includes marshalling and assembly of the force at mounting bases, dispersal points or airfields.

INITIAL PLANNING

406. Early planning may be conducted by a force commander who foresees the requirement for an airborne operation to achieve the mission. Where the force commander does not have the required assets, a concept of operations or an appreciation would be forwarded to a superior headquarters for consideration and assignment of assets under the appropriate degree of operational authority.

407. Following consideration of the concept of operations or appreciation, the officer approving the operation issues the initiating directive. At the tactical level this planning sequence ends with the issue of orders. Detailed planning then becomes the responsibility of the force commander.

JOINT PLANNING

Process

408. The force commander should institute a schedule of joint planning conferences to develop operational and supporting plans involving subordinate commanders. Planning considerations for airmobile operations are detailed here and also in the Manual of Land Warfare (MLW) One 2.9 - *Airmobile Operations,* chapter 3.

409. An initial planning conference should be conducted. This conference uses an appreciation process to develop a concept of operations. The following factors should be considered:

a. mission;

b. enemy;

c. command and control arrangements;

d. composition of ground and air elements;

e. outline administrative requirements;

f. air support;

g. mounting airfields and route limitations;

h. forward base and/or forward arming and refuelling points;

i. need for coordination with other forces, including fire support;

j. command and control warfare factors, including:

(1) deception,

(2) security,

(3) intelligence,

(4) psychological operations,

(5) electronic warfare, and

(6) offensive support;

k. responsibility and planning for rehearsals;

l. communications;

m. outline plan for concentration of the force;

n. special equipment and administrative arrangements;

o. modification and termination criteria; and

p. operational timetable.

410. From their appreciations, the GC and the air element commander (AEC) will develop outline plans for the operation before a final detailed joint planning conference. The airborne force subordinate and supporting commanders confirm detailed arrangements for the mounting and conduct of the airborne operation at the final planning conference. These arrangements include:

a. ground tactical plan;

b. landing/air assault plan which establishes the sequence and location of insertion;

c. air transport plan;

d. loading plan;

e. mounting plan, including:

(1) concentration;

(2) stores and equipment preparation and delivery;

(3) parachute and airdrop load rigging arrangements and responsibilities;

(4) operational and administrative arrangements at forward bases, forward arming and refuelling points and mounting airfield;

(5) movement to forward bases or mounting airfield; and

(6) security;

f. training and rehearsals;

g. reconnaissance and preliminary operations

h. communications plan;

i. command and control warfare tools, including:

(1) deception,

(2) security,

(3) intelligence,

(4) psychological operations,

(5) electronic warfare, and

(6) offensive support; and

j. force maintenance plan.

Planning Considerations

411. Following receipt of an initiating directive, order, instruction or warning order, nominated commanders of ground and air elements initially concentrate on specialist aspects in preparation for joint planning. The GC should consider:

a. mission,

b. threat,

c. objectives,

d. ground tactical phases,

e. airlanding/air assault sequence,

f. grouping,

g. succession of command,

h. equipment and weapons,

i. casualty evacuation plan,

j. air maintenance requirements,

k. selection of landing areas and rallying plan,

l. manpower and equipment requirements to clear landing areas for subsequent lifts,

m. preliminary or supporting action plans,

n. offensive support plan,

o. reinforcement plan, and

p. termination.

412. The AEC should consider:

a. availability, capacity and limitations of aircraft and aircrew;

b. route intelligence and enemy threat;

c. condition of facilities at available mounting airfields;

d. navigation and landing area identification and marking;

e. flight planning and aircraft loading;

f. air support plan;

g. meteorological aspects;

h. air assault plan;

i. escape routes to forward arming and refuelling point or recovery base;

j. succession of command;

k. subsequent air tasks; and

l. termination.

413. At subsequent joint conferences commanders finalise details of the operation and issue orders as recommended at paragraph 437. All elements of the air support plan should be fully aware of the composition, routing and means of identification of transport forces to avoid fratricide. Those items that will need to be considered in developing the joint plan are discussed in the following paragraphs.

JOINT PLANNING CONSIDERATIONS

Security

414. The requirement for security before and during an airborne operation is vital. Any compromise which may disclose friendly intentions, force capability or objective locations may be the difference between success or failure. Additional forces or an element of the airborne force may be required to undertake security duties at the mounting base or airfield.

415. An airborne force is most vulnerable when dropping, landing or unloading from aircraft; therefore, security of landing areas against enemy action is essential. Forces available should also be capable of interdicting approach routes. Once the assault force has landed it should quickly rally to cover the landing of subsequent lifts or drops. Air support within and reconnaissance and surveillance of the area surrounding landing areas should be continuously maintained. Offensive support should be planned to neutralise likely enemy locations.

Objectives

416. When intelligence is adequate, an airborne force may be given a specific objective. When enemy strength prevents airborne forces landing in the immediate vicinity of the final objective, intermediate objectives should be selected and alternative landing areas identified.

Enemy Reaction

417. An assessment of likely enemy reaction to the operation should consider:

a. strength and disposition of enemy ground forces near primary and alternative landing areas and objectives;

b. enemy reserve forces and their preparedness, including movement and reaction times;

c. enemy air detection, warning systems and associated air defence assets;

d. location, capability and mobility of enemy air defence weapons;

e. capability of enemy offensive air support assets; and

f. location and capability of enemy artillery within range.

Ground Force

418. Size and grouping of the ground force must be adequate to counter or destroy opposition. In particular, the size of the initial assault force should be sufficient to secure a firm base for subsequent landings. Speed is essential in lodging the remaining ground forces, particularly indirect fire support assets and stores and equipment to maintain initiative.

Airlift Capability

419. The total lift capacity will often dictate the tactical loading plan of the airborne force. Allowance should be made for unserviceable or downed aircraft, particularly in relation to loading the assault element, which should depart as a tactical unit or sub-unit of sufficient strength to deal with likely opposition. Should it be necessary to replace aircraft in the airlift, adjustments may have to be made in the allocation of aircraft to subsequent lifts.

Force Build-up

420. Deliberations of force build-up should address:

a. size and nature of threat,

b. expected tactical situation,

c. priority of insertion,

d. number and type of aircraft available, and

e. turnaround time between mounting airfield and landing areas.

421. An airborne assault should only be employed where there is no acceptable alternative, where expected enemy resistance at or near landing areas is minimal and defeat of the enemy is within the capacity of the assault element. This dictates maximum availability of offensive support combined with rapid force build-up. When relatively few aircraft are available, landing area selection should emphasise security, noting the smaller initial assault element which can be lodged and the danger of losing surprise during force build-up. Where the number of aircraft available is critical, consideration should be given to:

a. establishment of a forward operating base or forward arming and refuelling point as close as practicable to the assault landing area,

b. ensuring that refuelling is not needed during critical periods, and

c. staggering aircraft refuelling times where facilities are limited.

Timings

422. All timings for an airborne operation are based on the specific hour the operation commences, (H-hr) or parachute hour (P-hr). This timing will usually relate to a time which allows a force to build-up (or reduce in the case of an extraction) during favourable meteorological and tactical conditions. Timings should not change once an operation commences unless forced by enemy action. When limited fuel reserves are carried any delay may dictate early refuelling and consequent changes to the tactical plan.

Selection of Landing Areas

423. Landing area selection should be the result of effective reconnaissance and accurate intelligence. The following factors should be considered:

a. The area should be large enough to accept the entire initial assault aircraft formation or paratroop sticks.

b. Landing areas should be:

(1) large enough to facilitate a rapid administrative build-up,

(2) as close as practicable to the objective, and

(3) defensible.

c. Landing areas should not be:

(1) too apparent;

(2) dominated by tactical features within the range of enemy direct, indirect and small-arms fire; or

(3) bounded by obstacles.

d. Alternative landing areas should be selected.

e. Routes to assault landing areas should avoid known enemy air defence measures and flying hazards and provide maximum concealment.

424. Selection of landing areas is the responsibility of the GC after consultation with the AEC on flight safety aspects. Selection and marking of landing areas is addressed in chapter 12. Final approval for landing areas is the responsibility of the force commander.

Forward Basing

425. Most helicopters have limited range and require regular refuelling during protracted operations. Therefore, locations of forward operating bases and forward arming and refuelling points may be critical to both airlanded and airmobile operations. Similarly, if aircraft mounting bases and facilities are located so distant from landing areas that they cause unacceptable delays in turnaround or build-up, then refuelling equipment and a limited maintenance capacity may have to be re-located closer to the objective, possibly within the security of a forward operating base or forward arming and refuelling point. More detail on facilities is provided in chapter 5.

Terrain

426. Terrain should be considered when selecting approach routes to an objective. Flight routes should offer maximum concealment and security. Where the threat is from ground radars and surface-to-air weapons, aircraft should fly at low level using the terrain to avoid known enemy locations. However, this technique can confuse friendly support aircraft as well as enemy elements. Where the threat is from small-arms fire only, the AEC may elect to fly at higher altitudes.

Weather

427. All airborne operations, and paratroop operations in particular, are subject to weather conditions, not only in the objective area but also to a lesser extent at the mounting airfield and en route. An accurate weather forecast is needed to establish the execution `window´ for the operation and details should include:

a. predicted surface and upper level wind conditions,

b. likely cloud conditions and possible effects of fog or mist over the objective area, and

c. any other meteorological aspects required by AEC or GC to assist in planning.

Force Maintenance and Reinforcement

428. A force should not be committed to an airborne operation until an assessment has been made of the capability to maintain, reinforce and, if necessary, extract either by air or surface means. This assessment should be based on a forecast of:

a. aircraft or surface transport availability;

b. availability of aerial delivery equipment for airdrop;

c. casualty evacuation facilities;

d. availability of reserve forces and likely method of movement;

e. availability of landing areas where resupply, reinforcement or casualty evacuation may be effected; and

f. availability of pick-up zones from which the force might be extracted.

Deception

429. To achieve surprise, every effort should be made to deceive the enemy as to the date and location of an operation, aircraft flight paths, landing areas and tasks of the force. Deception is assisted by:

a. carefully selecting routes to avoid enemy positions;

b. use of cover plans;

c. preparation of primary and alternative landing areas by close air support or artillery;

d. feinting operations, including false touchdowns, or dropping of dummy paratroops; and

e. electronic warfare.

Night Operations

430. The decision to conduct airborne operations at night is dependent on the tactical situation, the air element capability to conduct night operations and the suitability of landing areas. Night operations should only be undertaken by a force which has achieved a high level of individual and collective training. In addition, the operation should be rehearsed to ensure that coordination and control are effective.

Pathfinders

431. Pathfinder elements are essential for all airborne operations. Specially trained pathfinder elements from designated units may be parachuted into or near a landing area which is believed to be secure, or may be inserted by other means. Responsibilities and tasks of pathfinders are further explained in chapter 6.

432. Although utilised mainly for airmobile operations, light observation helicopter pathfinder aircraft can be employed for other airborne operations. They may be used to conduct advance route reconnaissance for each aircraft element and either lead or provide en route navigation to selected rendezvous and primary and alternative landing areas.

Liaison Officers

433. An airborne force liaison officer represents the force commander. Tasks of liaison officers include ensuring smooth execution of the mounting plan and coordinating, with other activities, arrival and departure of the air transport force. Exchange of liaison officers between planning headquarters will assist in the planning process. An additional liaison officer may be required to liaise with airfield authorities at the mounting and staging airfields or forward operating bases if employed.

Air Defence

434. Airborne operations might enter contested airspace. The operation may involve strike aircraft, air defence, offensive counter air and the air transport force. Depending on the size of the air transport force and expected opposition, a significant counter air operation may be needed, as the air transport force may be a prime target for enemy air defence. Provision of air defence assets, planning of routes and design of identification procedures that do not compromise the emission control policy or security of the airborne force will require detailed cooperative planning with the airspace control authority.

Airspace Control

435. For smaller operations, careful planning of the air activity around landing areas and objectives, together with the tactical control exercised by forward air controllers or the terminal guidance provided by pathfinders, may be sufficient. For larger operations with multiple landing areas and dispersal sites involving multiple routes, the centralised control of air traffic in the area of the objective is provided by a mobile air operations team. In most operations, the more complex air traffic control situations arise during insertion of the main force. In this case the mobile air operations team should be deployed in the last chalk of the assault or as a preliminary to the arrival of the main force. Airspace control, which has been the responsibility of the AEC, reverts to the normal airspace control authority when the airborne operation is terminated.

ISSUE OF ORDERS

436. The final stage of planning is the issue of orders and instructions based on the force commander's concept of operations. Security requirements might dictate that the passage of detailed information to subordinate commanders is limited until late in the mounting phase.

437. The GC is responsible for issuing to units under command:

a. operation orders,

b. fire plans,

c. air movement tables,

d. states of readiness,

e. authority to initiate action to obtain special requirements,

f. movement to concentration areas and occupation of transit camps,

g. aircraft loading plans,

h. maintenance plan, and

i. final briefing.

438. The AEC is responsible for issuing to air units:

a. operation orders, including a general outline of the ground operation;

b. counter air and air defence plan;

c. aircraft configuration;

d. air movement plan;

e. aircraft loading plans;

f. routing;

g. air intelligence;

h. preliminary briefing of key personnel;

i. air traffic control procedures;

j. servicing and replacement plan;

k. security arrangements;

l. final briefing; and

m. forced landing and rescue procedures.

An example of an air order checklist is at Annex A. This format is also useful for the GC's orders. Details on the preparation of air movement instructions are given in ADFP 14 - *Air Transport.*

439. A timeline indicating the sequence of planning and the actions required to mount an airborne operation at the operational level is at Annex B.

Annexes: A. Air Orders Check List

B. Airborne Operation Timeline

AIR ORDERS CHECK LIST

GENERAL

Situation

1. **Enemy.** This includes expected opposition from ground forces and air defence assets.

2. **Own Forces.** This includes the provision of support aircraft.

Mission

3. A joint mission statement should contain a task together with its purpose.

EXECUTION

General Outline

4. **Conduct:**

a. ground force operations,

b. aircraft availability,

c. mounting airfields,

d. primary and alternative landing areas,

e. forward bases/forward arming and refuelling points,

f. air route details,

g. P-hr/ H-hr, and

h. meteorological details.

5. **Landing Area Aspects.** Details are:

a. location,

b. dimensions,

c. natural and man-made hazards,

d. elevation in feet above mean sea level,

e. direction of run-in/run-out for paratroop drops,

f. prevailing surface wind conditions for paratroops drops,

g. code identifiers for paratroop and equipment drops or landing area markings,

h. wind limitations, and

i. beginning morning nautical twilight/end evening nautical twilight.

6. Coordinating Instructions. These include:

a. ground force reception party (if required);

b. main body;

c. heavy drop;

d. air resupply;

e. loading plan (this is a critical element of the operation and will demand close coordination with GC);

f. appointments;

g. action before emplaning:

(1) chalk parade,

(2) combat equipment for paratroop operations/crew-served weapon distribution, and

(3) parachute issue and parade for paratroop operations;

h. action in aircraft:

(1) abort,

(2) vital loads, and

(3) partial landing/air assault;

i. action on landing areas:

(1) rallying,

(2) rendezvous procedures,

(3) helmets (paratroop operations),

(4) rendezvous markings,

(5) accounting for personnel, and

(6) rendezvous with pathfinder element;

j. action on landing being opposed; and

k. action on drop wide of DZ (for paratroop operations).

7. Administration and Logistics:

a. rations,

b. health support,

c. equipment,

d. landing area clearance, and

e. ammunition.

8. Command and Signal:

a. succession of command,

b. frequencies (if not included in the communications plan),

c. weather check,

d. codewords and reporting,

e. recognition signals for rendezvous with pathfinders, and

f. termination criteria.

AIRBORNE OPERATION TIMELINE

Serial	Day	Event
1	P-14	AFC initial staff conference. Warning order issued.
2	P-13	AFC initial planning conference. Present concept of operations. GC warning order issued.
3	P-12	GC planning conference.
4	P-11	Ground force heavy drop warning order issued.
5	P-10	AFC final planning conference.
6	P-8	AFC orders group.
7	P-7	Heavy drop items confirmed.
8	P-5	GC orders.
9		Forward mounting base advance party deploys.
10	P-4	Ground force assembled.
11	P-3	Heavy drop items prepared for air movement and delivered to heavy drop rigging area. Move to mounting area/forward mounting base.
12	P-2	Airborne force assembled.
13	P-1	GC orders and heavy drop orders.
14	P Day	Move to mounting area. Load aircraft. Aircrew final briefing. First wave parachute assault.
15	P/P+1	Insertion of subsequent waves by parachute or airlanding.

have the experience and capability to command and control the operation. In airmobile operations the airmobile force commander (AMFC) will usually be an Army commander, except perhaps in operations on offshore territories.

305. The force commander is responsible for conduct of the operation in accordance with the initiating directive and must be assigned at least operational control of forces. Limits to the force commander´s authority and employment of assigned forces must be clearly stated so that planning and execution of the operation can proceed efficiently. To this end, the force commander should be consulted before any assigned assets are withdrawn.

Subordinate Commanders

306. Commanders of ground and air elements involved in the operation will be directly responsive to the force commander. These subordinate commanders are:

a. The ground commander (GC) is in command of the ground element and is usually appointed in the initiating directive. The GC presents the ground tactical plan that is the basis for all other planning and establishes the ground objectives and phases required to achieve the mission in consultation with the force commander.

b. The air element commander (AEC) will generally be the senior officer of the major air transport element involved in the operation. In operations involving a number of different aircraft types, he may be specially selected. The AEC selects air tactics to be used and designs an air transport plan which best satisfies requirements of the GC and his tactical plan. The AEC is also responsible for coordinating aspects of air safety throughout the operation and for airspace management, including offensive air support, coordinated by the artillery commander, in the vicinity of the landing or objective areas. This includes coordination with any maritime assets in the vicinity of the operation.

307. In smaller airmobile operations, the AMFC may also be the GC. There may be occasions where the AMFC joins his forces on the ground, as in the case of a battalion insertion where the battalion commander may be appointed AMFC. In this situation, part of the force may secure the area before insertion of the AMFC and his headquarters. However, for an airmobile assault there are significant disadvantages in the AMFC becoming embroiled in the ground battle; this could lead to a loss of overall control of the operation or discontinuity in command due to loss of the AMFC.

Control of an Airborne Operation

308. The force commander may exercise control of an airborne operation from an airborne command and control aircraft or from a ground command post. The force commander´s location will depend on the size and complexity of the operation, the communications environment, commitments to other units under command and the air situation. An aircraft may be specially designated for command and control or a troop-carrying transport aircraft may be used.

309. The location of each of the commanders will depend on the operation. For strategic missions it may be advantageous for the force commander, GC and AEC to remain together until the GC has two or more sub-units on the ground, at which stage the GC would join his unit. For tactical missions, the force commander, AEC and artillery commander should be together in the command and control facility to coordinate the operation.

310. The force commander would not normally accompany ground combat elements into battle. It may be impractical to control the entire operation and coordinate support from the objective area as communications may be limited, and immediate crises may assume unwarranted significance. During airmobile operations, it remains the prerogative of the force commander to determine the location which best suits control requirements. In other types of airborne operations, command and control is normally best exercised from an airborne command post if airspace

security and appropriate communications can be provided. In any case, the point of contact with air and ground elements will be through the air element and ground commanders, whose judgment and advice are essential to the effective conduct of the operation.

311. To preserve continuity of contact, succession of command for all appointments must be widely known and taken into account in aircraft loading plans. Command can then continue if a commander becomes a casualty or communications are lost.

Termination

312. Termination or cancellation of airborne operations is the responsibility of the force commander, who may also delegate authority to ground and air element commanders either in isolation or jointly, depending upon clearly defined circumstances. Examples of these circumstances are:

a. mission accomplishment,

b. enemy force levels or own force aircraft attrition,

c. failure of a supporting action,

d. weather preventing landing or paratroop drop,

e. casualty levels that prohibit subsequent operations,

f. change in the enemy situation, or

g. cancellation by a higher commander.

Control of Fire Support

313. The force may depend on offensive support such as close air support, battlefield air interdiction, artillery, mortars or naval gunfire support and perhaps fighter escort. It may be possible to position artillery within range of the objective. This may require a preliminary operation.

314. Procedures for the coordination of fire support are contained in ADFP 11 - *Offensive Support.* The artillery commander should accompany the force commander to coordinate offensive support assets.

315. Close air support may be `pre-planned´ or `on-call´. Pre-planned close air support will be part of the overall fire plan and should be aimed at supplementing artillery or naval gunfire support which can provide the sustained fire required for the operation. On-call close air support, in conjunction with other forms of on-call fire support, can respond to contingencies that arise as the air assault or landing develops.

316. To facilitate early coordination of fire support, battery commander parties, forward observer parties, forward air control parties or air contact officers should be included in initial aircraft loads. Where pathfinder teams are employed they should be capable of fulfilling the air contact officer´s role and coordinating other aspects of offensive support. Detail on offensive support is provided in chapter 8.

Annex: A. Example Format of an Airborne Operation Initiating Directive

EXAMPLE FORMAT OF AN AIRBORNE OPERATION INITIATING DIRECTIVE

SECURITY CLASSIFICATION
Page 1 of 7

Copy No. of
CJFA Directive No.
MPO Reference

DIRECTIVE BY (1)

COMMANDER JOINT FORCES AUSTRALIA

TO

COMMANDER (INSERT APPOINTMENT)

OPERATION (INSERT NAME)

References: (2) A. AJSP
B. DIO Report
C. ADFP

TIME ZONE USED THROUGHOUT THIS DIRECTIVE:(3)

SECURITY CLASSIFICATION

Notes:

1. The title should accurately reflect the purpose of the directive. If the directive is to the airborne force commander, the name and appointment of that commander are to be included.
2. References should be limited to those available to the recipient of the directive.
3. The rule for inclusion of a time zone is as for operation orders referred to in ADFP 102 - *Service Writing.*

SECURITY CLASSIFICATION
Page 2 of 7

APPOINTMENT/NOMINATION [(4)(5)]

1. This section can take two forms. If the directive appoints an officer to a position of command then the following words should be used: `You are appointed .....´. When the directive calls for the nomination of an officer, the following words should be used: `You are to nominate an officer to be appointed .....´.

SITUATION [(6)]

2. This section must be included in all directives and is to give a brief outline of the background to the current situation and likely developments. A subsection detailing the enemy threat and outlining the plan of the entire operation is to be included. This section should also reflect the required end state.

MISSION

3. This should be a clear and concise statement of the task and its purpose. The statement should clearly indicate the action to be taken by the airborne force.

SECURITY CLASSIFICATION

Notes:

4. The heading will depend upon whether the directive is appointing, or calls for nomination of, an officer.

5. The content of this section may be extracted and issued by message in the form of a warning order. If issued in this manner, it will include direct liaison authorisation.

6. Information which might normally be covered under headings such as `Background´ or `Introduction´ is to be covered under the heading `Situation´.

OBJECTIVES

4. The objectives section amplifies the mission. Both national and military objectives should be included, if appropriate.

CONSTRAINTS

5. This section should detail all constraints placed on the commander. Constraints could include:

a. government guidance,

b. employment limitations,

c. ROE,

d. law of armed conflict (LOAC) considerations,

e. weapons use,

f. time and space limitations,

g. arrangements for termination of the operation,

h. airfield availability and route limitations, and

i. logistic constraints.

FORCES ASSIGNED

6. This section should include a brief description of the forces assigned, or expected to be assigned. The detailed order of battle may appear as an annex. Suitable subsections could be:

a. maritime forces,

b. ground forces, and

c. air forces.

COMMAND AND CONTROL

7. The command and control arrangements for all forces assigned must be clearly stated and should be in accordance with the guidance contained in ADFP 1. The period for which forces assigned is to be included.[7]

Note:

7. If combined operations are involved, the relationship of the Australian commander to other allied commanders must be stated precisely as must any limitations in command and control. Any arrangements for subordinates to have access to single Service commanders as well as provision for succession of command must be stated.

SECURITY CLASSIFICATION
Page 5 of 7

COORDINATION

8. The coordination section should include details of:

a. coordination with operations of other forces and agencies;

b. security and deception plans;

c. intelligence and sources of intelligence;

d. areas/boundaries;

e. reports and returns;[8]

f. directions for production and distribution of operational plans, instructions and orders; and

g. mounting arrangements.

COMMUNICATIONS-ELECTRONICS [9]

9. Communications-electronics details, including electronic warfare, are not normally included in the body of a directive but are shown as an annex.

SECURITY CLASSIFICATION

Notes:

8. The superior authority details the type and frequency of reports required.

9. The detail in this section will normally be a separate annex.

ADMINISTRATION AND LOGISTICS

10. This section should specify:

a. movement details for assembly of the force;

b. logistic support arrangements;[10]

c. personnel matters;[11]

d. health support,

e. method of amending the directive;

f. public relations;

g. financial matters;[11] and

h. special equipment, including sea/land/air rescue equipment.

TIMINGS

11. A statement detailing when the directive becomes effective and its duration must be included. A statement of the circumstances in which the directive may be either cancelled or extended should also be included. H-hr or P-hr may be set, or alternatively, a time for task completion may be advised.

Notes:

10. The detail to be included will depend upon the nature of the directive. In some cases details of such matters as variations from ADFP 2, discipline, conditions of service, welfare, postal arrangements, casualty procedures and leave need to be covered.

11. Separate financial instructions are normally issued.

ACKNOWLEDGMENT

12. Every directive must require the recipient to acknowledge receipt.

( )
Air Marshal
Commander Joint Forces
Australia

Date

Annexes: A.
B.

Distribution

13. The directive would normally have a single action addressee. Information addressees could include the following:

a. CDF (file);

b. joint commander, joint force commander or component commanders (if not the action addressee);

c. formation commanders;

d. recipients of complementary directives;

e. Assistant Chief of the Defence Force (Operations); and

f. allied commanders (if applicable).

Vulnerability

206. Elements of an airborne force are vulnerable and require deception and security measures during the planning and mounting phases. During the air transport phase, fighter escort may be needed. Plans should also include suppression of enemy ground-based air defence systems en route to and within the objective area.

207. During the air assault or landing phase, air and ground elements are vulnerable to anti-aircraft defences and small arms fire. This vulnerability may be compounded by a slow approach speed and low altitude of aircraft during insertion. Vulnerability is also increased when aircraft are hovering or on the ground, or if aircraft return to complete insertion.

208. Accurate and timely intelligence on enemy strengths and dispositions in the areas adjacent to or on landing areas is vital. Provision should also be made for offensive support and the employment or allocation of reserve assets, not only for the airborne force but also for offensive and other supporting forces.

Training

209. Airborne operations should only be conducted by elements that have achieved the necessary proficiency in individual and collective training. Chapter 15 details the training considerations for airborne operations. In general, the levels of training required are as follows:

a. Airlanded operations, including composite and extraction operations, can be conducted with minimal special-to-task individual training. However, considerable unit and joint training in the mounting, preparation, emplaning/deplaning, support, and command and control of the force are essential. Joint rehearsals of the operation should be undertaken.

b. Airmobile operations demand a high standard of collective training. Only units which have achieved the prerequisite individual and collective skills should be used.

c. Unit level training, including that conducted for composite and special forces operations, must weld individual paratroops into an effective airborne force. Similarly, the air element must develop the necessary formation flying and navigational skills to lodge the ground force. Training for logistic support soldiers (air dispatchers and parachute riggers) should be conducted in concert with both the paratroop unit and air element. Finally, joint aspects must be practised for all phases of the operation.

Weather Dependency

210. Cloud cover or wind may have an adverse effect on all types of airborne operations and parachute operations in particular. Weather conditions at the mounting airfield, en route to or within the objective area may be a limiting factor. Detailed weather forecasting is necessary well in advance of the intended parachute hour. Aircraft such as C130 fitted with inertial navigation systems are capable of supplementing predicted wind forecasts on approach to the objective area.

Limited Combat Power

211. Airborne forces are particularly vulnerable on landing until they are organised as sub-units or units in the vicinity of the objective. This is referred to as rallying. Airmobile troops can rally more quickly because they are less dispersed on arrival at the landing area. An airborne force has limited combat power once landed because the force is lightly equipped in comparison to other combat units. They rely on offensive support to a greater degree than other forces, particularly anti-armour weapons and indirect fire support.

212. This limitation is partly offset by surprise. High morale through discipline, training, confidence and trust can often be the deciding factor in airborne operations. Nevertheless, airborne forces should be employed in the knowledge that they require dedicated offensive support and resupply and that they will lack mobility on the battlefield once landed. They should also be reinforced or relieved within a short period of time.

Note:

1. American, British, Canadian, Australian (Armies) (ABCA) agreements list five phases of an airmobile operation: ground tactical, landing or air assault, air transport, loading and staging. ADF doctrine combines the loading and staging phases into a single phase termed `mounting´.

TYPES OF AIRBORNE OPERATIONS

106. Airborne operations may be described as:

a. airlanded by fixed or rotary wing aircraft,

b. airmobile,

c. paratroop,

d. composite,

e. special forces, or

f. extraction.

Airlanded Operations

107. Airlanding usually refers to operations involving fixed-wing assets using a landing area, but includes free roping and rappelling. These operations transport personnel, crew-served weapons and limited vehicles into any form of landing area. The advantages of this form are:

a. speed into action,

b. less training,

c. rapid build-up on the ground, and

d. early recovery of casualties.

108. The main disadvantage of airlanded operations is the vulnerability of both the ground force and transport aircraft.

Airmobile Operations

109. Airmobile operations are defined as:

`Operations in which combat forces and their equipment manoeuvre about the battlefield in helicopters under the control of a ground force commander to engage in ground combat.´

110. Airmobile operations can incorporate repeated insertions/extractions onto a number of landing or objective areas. Army doctrine for airmobile operations is dealt with in more detail in the Manual of Land Warfare part one, volume 2, pamphlet No. 9 (MLW One 2.9) - *Airmobile Operations.*

111. Airmobile operations involve aircraft which provide battlefield mobility and support. They enable a commander to react quickly and maintain the initiative. The main disadvantages of airmobile operations are:

a. aircraft employed often suffer from restricted payload and range,

b. conduct at night or in poor weather is difficult, and

c. heavy fire-power is normally not consistently available to the combat force.

Paratroop Operations

112. These operations involve the delivery by parachute of personnel and their equipment onto a predetermined landing area from an aircraft in flight. Such operations can be conducted by paratroops using stand-off, free-fall or static-line parachute techniques.

113. The aim of paratroop insertions is to land a force and its equipment either overtly or clandestinely on, or near, an objective area. Paratroop operations are preceded by preliminary operations to provide local information and control of selected landing areas. These preliminary operations are normally conducted by either light observation helicopter elements or special forces elements known as pathfinders. Pathfinders are not organised or equipped to secure a landing area. They should be tasked to provide reports on enemy activity and dispositions, weather conditions in the objective area, and other designated tasks required by the force commander to confirm his plan.

114. The selection and marking of landing areas is addressed at chapter 12. The responsibility for selection, operation and control of landing areas is an Army responsibility; RAAF is responsible for air safety aspects. In operations, the force commander has authority for the final decision on the selection and operation of landing areas.

Composite Operations

115. Ground forces can be inserted using a combination of airmobile, paratroop and airlanded operations known as a composite operation. Such operations are used when the airmobile or paratroop element is required to secure a landing area for the main force to airland in either rotary or fixed-wing aircraft.

Special Forces Operations

116. Special forces operations differ from conventional airborne operations in that they are normally clandestine and undertaken by small groups using special techniques. These missions generally require special security during their planning, mounting and conduct.

Extraction Operations

117. These operations involve the withdrawal of a ground force using fixed or rotary wing aircraft. They require the establishment of a defended emplaning area and the progressive withdrawal of the force. An extraction operation may well occur at short notice using less than ideal landing areas.

118. An extraction operation may be necessary to comply with a tactical plan, relieve enemy pressure or avoid defeat. If sufficient time exists, special consideration should be given to offensive support. Artillery, air support and naval gunfire support may be necessary to support extraction.

JSP(AS) 39, First Edition, 1991

ADFP 39, First Edition, 1995

Sponsored by:

Land Commander Australia
Headquarters Land Command Australia

Developed and Produced by:

Commandant
Australian Defence Force Warfare Centre

Published by:

Director Publishing
Defence Centre - Canberra

AUSTRALIAN DEFENCE FORCE PUBLICATION

OPERATIONS SERIES

AIRBORNE OPERATIONS

Australian Defence Force Publication 39 (ADFP 39) - *Airborne Operations* is issued for use by the Australian Defence Force and is effective forthwith. This publication supersedes JSP(AS) 39, First Edition, dated July 1991, copies of which are to be destroyed in accordance with current security instructions.

A.L. BEAUMONT
Admiral
Chief of the Defence Force

4 April 1995

Headquarters
Australian Defence Force
Canberra ACT 2600

AMENDMENT CERTIFICATE

1. Proposals for amendment to this publication are to be forwarded to:

Commandant
Australian Defence Force Warfare Centre
RAAF Base
WILLIAMTOWN NSW 2314
AUSTRALIA

2. An information copy of the proposed amendment is also to be forwarded to:

Assistant Chief of the Defence Force (Operations)
Headquarters Australian Defence Force
Russell Offices (M-B-42)
CANBERRA ACT 2600
AUSTRALIA

Amendment		Effected	
No.	Date	Signature	Date

AUSTRALIAN DEFENCE FORCE PUBLICATIONS

OPERATIONS SERIES

		STOCK NUMBER (NSN)
ADFP 1	*Doctrine*	7610-66-139-0587
ADFP 2	*Division of Responsibilities Within the Australian Defence Force*	7610-66-139-3520
Supplement 1	*International Interoperability Arrangements Handbook*	
ADFP 3	*Rules of Engagement*	7610-66-135-2263
ADFP 4	*Mobilisation Planning*	7610-66-139-4137
ADFP 6	*Operations*	7610-66-139-4138
Supplement 1	*Maritime Operations*	
Supplement 2	*Land Operations*	
Supplement 3	*Air Operations*	
ADFP 9	*Joint Planning*	7610-66-139-3518
Supplement 1	*ANZUS Planning Manual (APM)*	
Supplement 2	*Australia's Territorial Sea Base Line*	
ADFP 10	*Communications*	7610-66-139-4139
ADFP 11	*Offensive Support*	7610-66-139-4140
ADFP 12	*Amphibious Operations*	7610-66-139-4141
Supplement 1	*Amphibious Handbook*	
ADFP 13	*Air Defence and Airspace Control*	7610-66-139-4142
ADFP 14	*Air Transport*	7610-66-139-4143
ADFP 15	*Operations in an NBC Environment*	7610-66-139-4144
ADFP 17	*Joint Exercises and Training*	7610-66-139-4145
Supplement 1	*Umpiring Handbook*	
ADFP 19	*Intelligence*	7610-66-139-4147
ADFP 20	*Logistics in Support of Joint Operations*	7610-66-139-4148
ADFP 21	*Movements*	7610-66-139-4149
ADFP 22	*Sea Transport*	7610-66-139-4150
ADFP 23	*Strategic Strike Operations*	7610-66-139-4151
ADFP 24	*Electronic Warfare*	7610-66-139-4152
ADFP 25	*Psychological Operations*	7610-66-139-4153
ADFP 29	*Surveillance and Reconnaissance*	7610-66-139-4154
ADFP 31	*Beach Intelligence*	7610-66-139-3519
ADFP 37	*Law of Armed Conflict*	7610-66-139-4155
Supplement 1	*Commanders' Guide*	

ADFP 39	*Airborne Operations*	7610-66-139-4156
ADFP 41	*Defence Public Information Policy During Periods of Tension and Conflict*	7610-66-133-6630
ADFP 43	*Evacuation Operations*	7610-66-139-4157
ADFP 45	*Special Operations*	7610-66-139-4158
ADFP 53	*Health Support*	7610-66-139-3258
ADFP 56	*Explosive Ordnance Disposal*	7610-66-139-4159
JOPNO	*Joint Operations Notebook*	7610-66-139-4162
TACAID	*Tactical Airborne Information Document*	

STAFF DUTIES SERIES

ADFP 101	*Glossary*
ADFP 102	*Service Writing*
ADFP 103	*Abbreviations and Military Symbols*

FOREWORD

1. ADFP 39 - *Airborne Operations* details the guidance necessary to plan and conduct airborne operations within the Australian Defence Force. The contents of this publication have been derived from established principles, joint experience and lessons learnt during exercises and operations.

2. This publication is based upon the general principles and doctrine contained in ADFP 1 - *Doctrine* and ADFP 2 - *Division of Responsibilities Within the Australian Defence Force.* These should be read in conjunction with ADFP 11 - *Offensive Support* and ADFP 14 - *Air Transport*. Army doctrine for airmobile operations is covered in greater detail in the *Australian Army Manual of Land Warfare* part one, volume 2, pamphlet No. 9 - *Airmobile Operations.*

3. Every opportunity should be taken by the users of this publication to examine constructively its contents, applicability and currency. If deficiencies or errors are found, amendment action should be taken. Australian Defence Force Warfare Centre welcomes any assistance, from whatever source, to improve this publication.

4. ADFP 39 is not to be released to foreign countries without the written approval of the ACOPS.

CONTENTS

ACRONYMS AND ABBREVIATIONS

AE	air element
AEC	air element commander
AFC	airborne force commander
ALG	advanced landing ground
AME	aeromedical evacuation
AMFC	airmobile force commander
AO	area of operations
ATC	air traffic control
Bcas	battle casualty
casevac	casualty evacuation
CP	command post
DZ	drop zone
DZSO	drop zone safety officer
emcon	emission control
FAC	forward air controller
FARP	forward arming and refuelling point
GC	ground commander
H-hr	specific hour the operation commences
LOAC	law of armed conflict
LP	landing point
LZ	landing zone
NBC	nuclear, biological and chemical
NBcas	non-battle casualty
P-hr	parachute hour
PI	point of impact
PZ	pick-up zone
SF	special forces
SOP	standing operating procedures
TOPP	threat-oriented protective posture

GLOSSARY

advanced landing ground [1]
An airfield, usually having minimum facilities, in or near an objective area.

airborne force
A force composed primarily of ground and air units organised, equipped and trained for airborne operations.

airborne operation
An operation involving the movement of combat forces and their logistic support into an objective area by air for execution of a tactical or strategic mission, when the forces involved may be required to engage in combat immediately on leaving the aircraft.

airlanded
Moved by air and disembarked, or unloaded, after the aircraft has landed or while a helicopter is hovering.

airmobile forces
The ground combat, combat support and air transport units required to conduct an airmobile operation.

airmobile operations
Operations in which combat forces and their equipment manoeuvre about the battlefield in helicopters under the control of a ground force commander to engage in ground combat.

altitude
The vertical distance of a level, a point or an object considered as a point, measured from mean sea level.

chalk
A load of troops and/or equipment embarked on one aircraft.

clandestine operation
An activity to accomplish intelligence, counterintelligence and other similar activities sponsored or conducted in such a way as to assure secrecy or concealment.

drift indicator [2]
A device which, when released from an aircraft or on the ground, reflects the drift or wind effect that would be experienced by an unmodified parachute canopy.

drop zone [1][2]
A specified area upon which airborne troops, equipment or supplies are airdropped.

element
A subdivision of an air transport flight with a minimum of two aircraft.

extraction zone [2]
A specified drop zone used for the delivery of supplies and/or equipment by means of an extraction technique from an aircraft flying very close to the ground.

flight
Two or more aircraft with a common mission under the command of a flight lead. Several flights may be controlled by the air element commander.

forward arming and refuelling point (3)
A secure location in which fuel and ammunition are positioned for rapid refuelling and rearming of helicopters, or other tactical aircraft. A limited maintenance capacity may also be provided.

forward operating base
A secure landing zone located forward of the mounting area and as close as practicable to the objective area, to allow for the rapid deployment and build-up of a ground force and the quick turn around of fixed or rotary-wing aircraft. It may contain a forward arming and refuelling point. The security of the base is the responsibility of the ground commander.

free-fall (2)
A parachute manoeuvre in which the parachute is opened either manually or automatically at a predetermined altitude.

hazardous body of water (3)
A body of water which, because of its depth and proximity to the drop zone, constitutes a hazard to paratroops.

height
The vertical distance of a level, a point or an object considered as a point measured above ground level.

H-hr
H-hr for an airmobile/airlanded operation is the time at which the first wave/sortie of the assault force lands on the landing zone/advanced landing ground or lifts off from the pick-up zone in an extraction.

high altitude high opening (3)
The term used when paratroops exit an aircraft at heights in excess of 10 000 feet above mean sea level and the main parachute is activated either by means of a static-line or manually by the individual within 10 seconds of exiting the aircraft. At exit heights in excess of 10 000 feet above mean sea level supplementary oxygen or personal oxygen breathing systems are required.

high altitude low opening (3)
The term used when paratroops exit an aircraft at heights in excess of 10 000 feet above mean sea level and the main parachute is activated either by mechanical or manual means following a predetermined delay in free fall of at least 10 seconds after exiting the aircraft.

landing point (1)
A point within a landing site where one helicopter can land, or vertical take-off and landing aircraft can land.

landing site (1)
A site within a landing zone containing one or more landing points.

landing zone (1)
A specified zone within an objective area used for the landing of aircraft.

link-up
The meeting of two or more ground units, often at the conclusion of an airborne operation. Link-up frequently entails the relief or reinforcement of a paratroop force by other ground forces.

mobile air operations team
RAAF teams in the forward area who may assist in the selection and preparation of helicopter landing sites, drop zones and forward airstrips, and control aircraft at selected landing sites or airstrips.

mobile air terminal unit
A specialist RAAF movements unit capable of being deployed to airfields where there is no permanent air movement section, and undertaking the loading/unloading of transport aircraft and the handling of passengers, cargo and mail.

P-hr [(2)]
A predetermined hour selected for a paratroop insertion. It indicates the time at which the leading drop aircraft will commence paratroop insertion over the predetermined drop zone. All offensive fire support and other coordination measures are based on P-hour.

pathfinder team
A team dropped or airlanded at an objective to establish and operate navigational aids for the purpose of guiding aircraft to drop zones or landing zones.

pick-up zone [(3)]
A landing zone used to emplane troops and/or load cargo.

rally
The reorganisation of paratroopers into manoeuvre sub-units on or near the drop zone.

sortie
In air operations, an operational flight by one aircraft. An aircraft taking off from point A, landing at point B, then returning to point A would have completed two sorties.

split navigation
A method of in-flight dispersion where elements fly using separate minimum risk routes to a rendezvous point just short of a landing zone or pick-up zone.

stand-off paratrooping [(2)]
Also referred to as high altitude high opening military free-fall paratrooping. It is a parachute descent, initiated well away from the DZ, usually from a height in excess of 10 000 feet above mean sea level. Individual parachute activation occurs immediately after exit, with the individual paratroop controlling his parachute to a predetermined target area.

static line paratrooping [(2)]
A paratroop technique where the canopy is deployed by a static line connected to the airdrop aircraft.

wedge
A ramp-mounted cargo air drop platform which may be used in conjunction with paratroop operations.

Notes:

1. Throughout this publication, except where required to avoid confusion, the term `landing area´ will be used to denote LZ, DZ or ALG. Similarly, the term `force commander´ will be used to denote airborne force commander (AFC) or air mobile force commander (AMFC).

2. Terms used in paratroop operations only.

3. Terms used in airmobile operations only.